Innovation in Motion
TSUBAKI

TSUBAKI
ZIP CHAIN ACTUATOR®

Applications

Feature 1

- Can be installed even in areas with little ceiling space
- High speed lifting and lowering means shorter conveyance takt times

Ex.: Pallet transfer lift

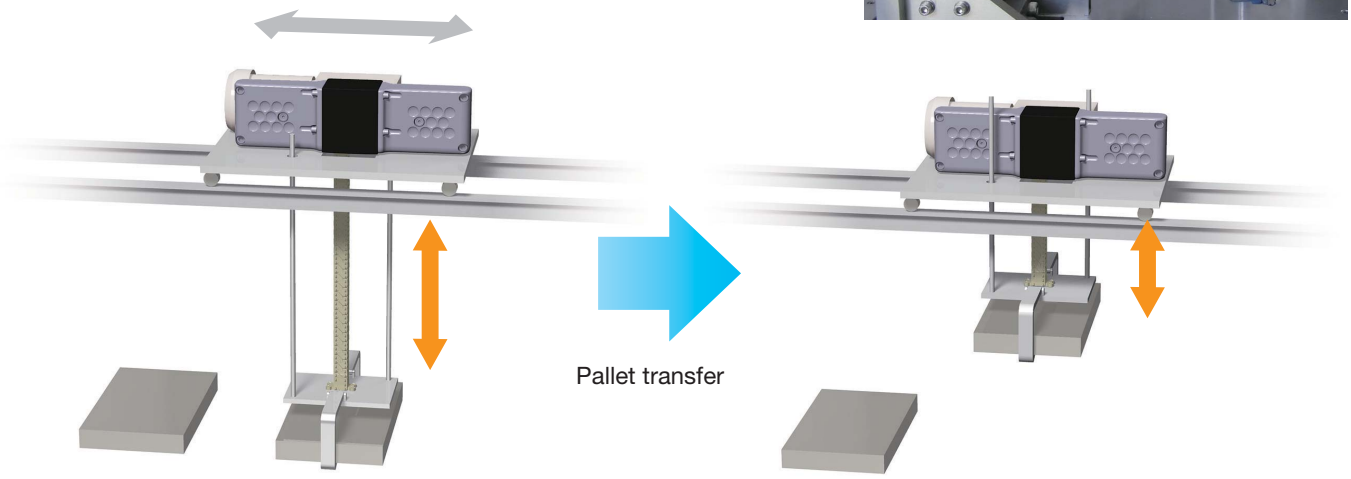

ZIP CHAIN ACTUA

Feature 2

- Compact, with a low floor, so many trays can be loaded
- Can be stopped at multiple arbitrary positions with high precision to match the heights of a variety of trays

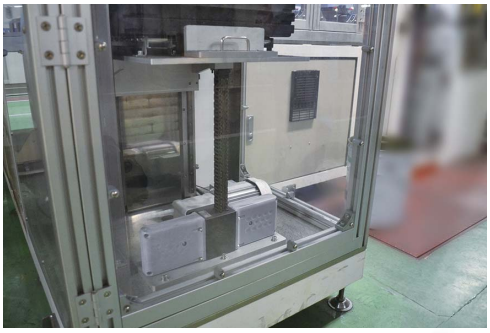

Ex.: Product tray depalletizer

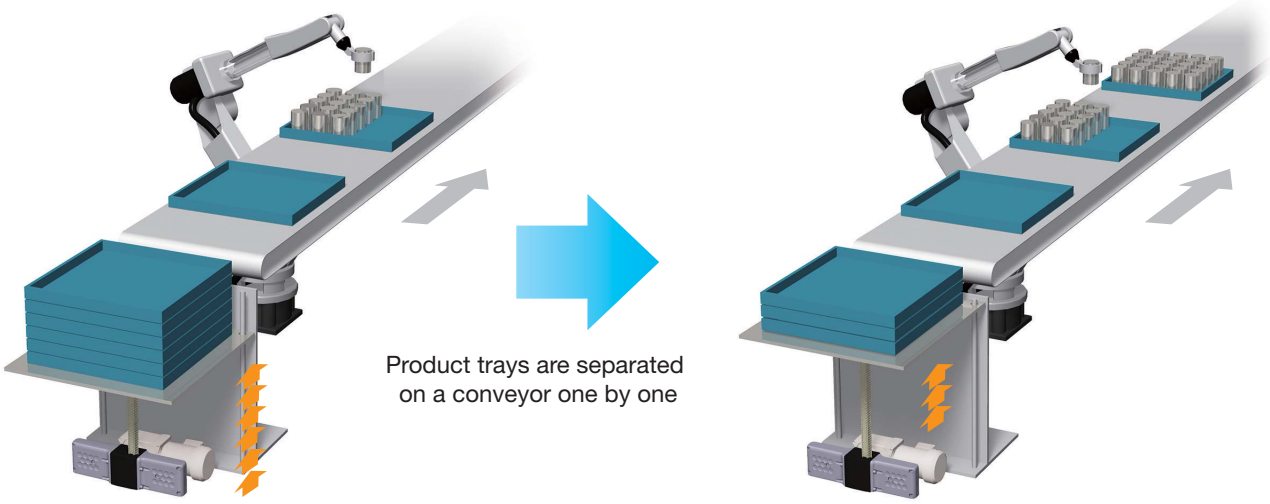

Feature 3

- Installation does not protrude from the equipment
- Quicker door operation minimizes changes to the furnace ambient temperature
- Quieter than pneumatic cylinders and oil-less operation makes it more environmentally friendly

Ex.: Furnace door operating mechanism

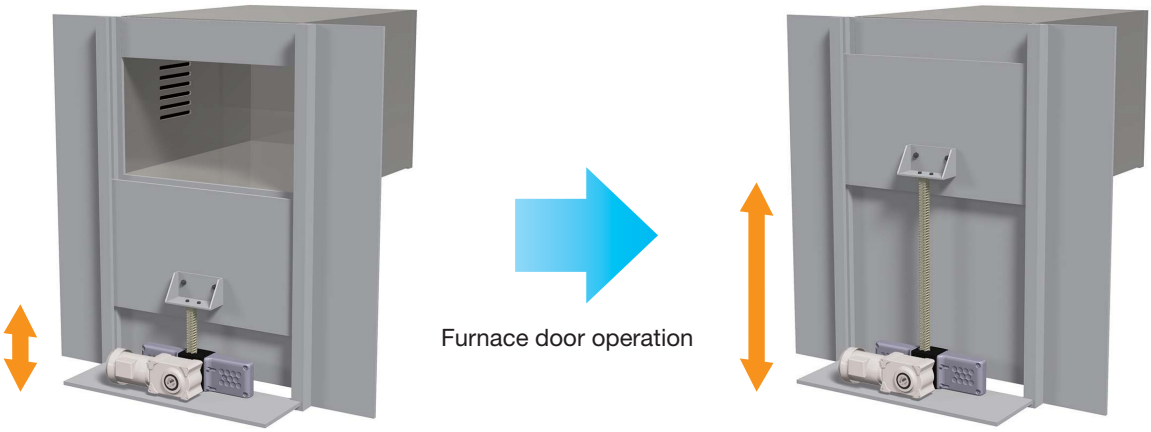

TOR® Applications

Feature 4

- Heavy load can be lifted by multiple ZCA®, when one unit is not enough capacity.
- Compact interlocking using dual shaft motors

Ex.: High load lifter

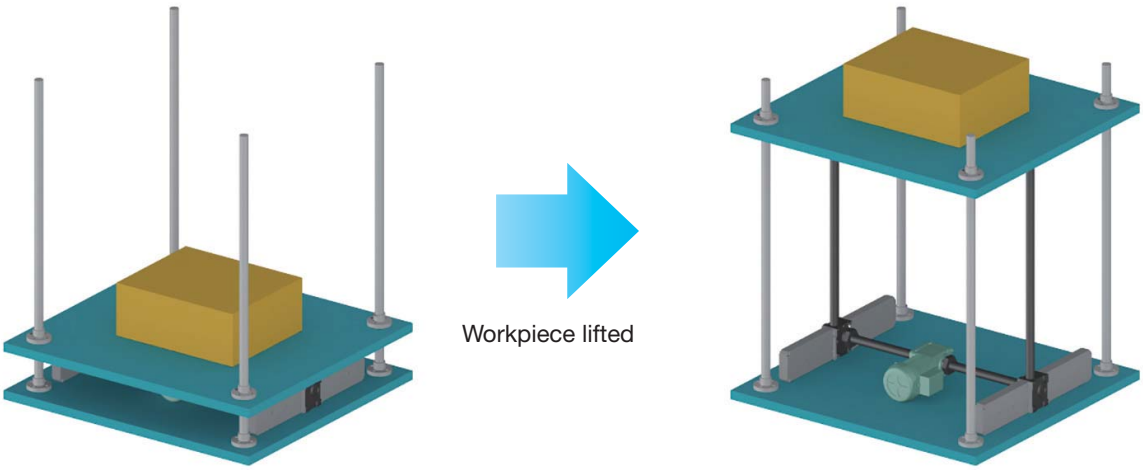

Stacking / Unstacking Applications

▶ Product Shipping Lines — Stacking Equipment

Before

- Using hydraulic cylinders, the in-flowing products were lifted one by one and stacked from the bottom.
- Hydraulic cylinders were installed by digging pits.

Problem

- Even if production capacity increases, shipping volume cannot be increased.
- The speed of the hydraulic cylinder is too slow.
- The drive section is in the pit, making maintenance difficult. Oil leakage problems occur.

Solution

- High operating speed: Speed can be increased by using servomotors to drive.
- Compact: Space can also be saved in the stroke direction, so there is no need for a pit.
- Motorized: Non-hydraulic (Clean environment)

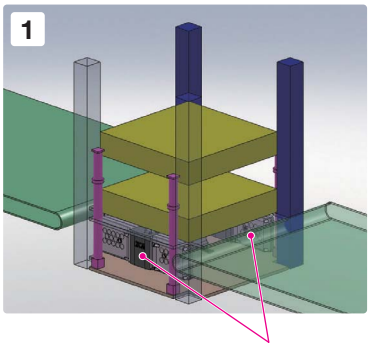

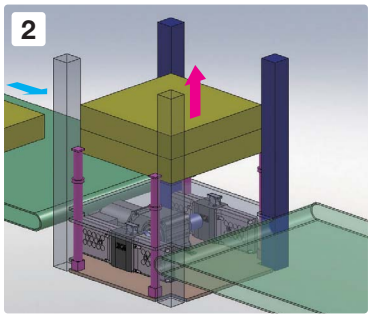

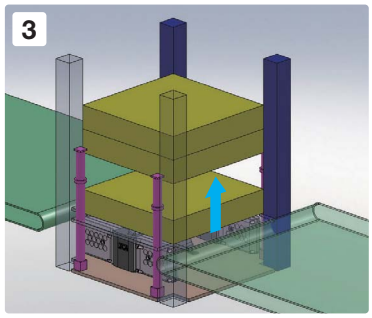

The compact ZCA can fit even in small spaces

▶ Automation of Manual Stacking Work

Before

- Workers manually stacked products coming off the conveyors one by one.

Problem

- The task of stacking heavy products is a heavy burden on workers.
- This work also takes a long time to complete.

Solution

- Automation: By combining encoders, high precision multi-point stopping has become possible, allowing the conveyor to deliver products matching the product height.
- Compact: Since the space under the load can be reduced, the number of products that can be stacked increased.

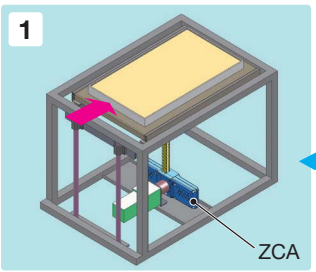

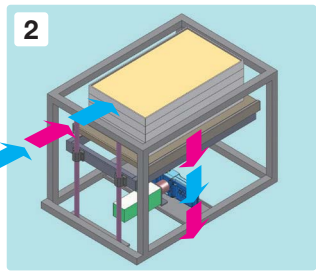

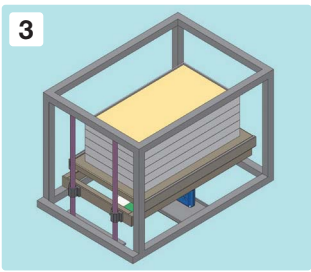

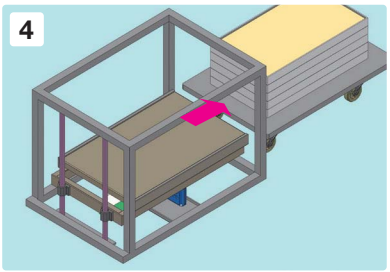

Horizontal Pushing / Pulling Applications

▶ Workpiece Supply Equipment

Before

- Pneumatic cylinders were used to supply workpieces.

Problem

- **There is a large amount of cylinder protrusion, blocking aisles.**
- **To handle various types of products, it is necessary to adjust the feed speed of the workpieces, but this is not possible with pneumatic cylinders.**

Solution

- **Compact: Protrusion into the aisle is reduced and free passage is ensured.**
- **Motorized: Feed speed can be adjusted by controlling the inverter.**

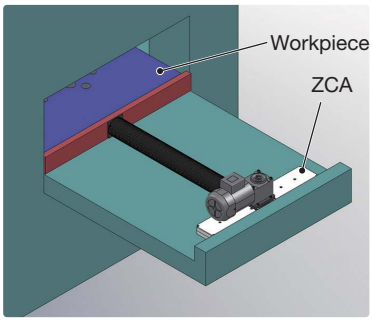

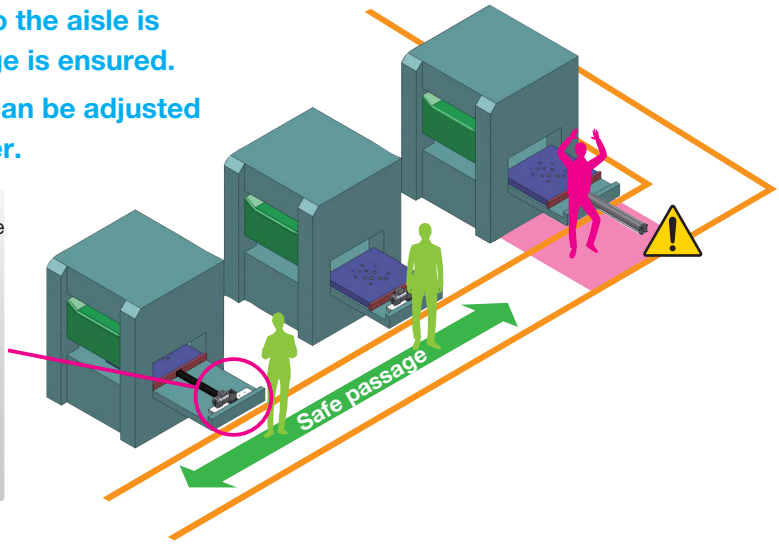

▶ Pallet Redirecting Equipment

Before

- Pneumatic cylinders were used.
- The direction of the pallet was changed when transferred from the belt conveyor to the roller conveyor.

Problem

- **There is a large amount of protrusion from the conveyor side, creating wasted space and preventing installation against walls.**

Solution

- **Compact: Arranging the drive motor and ZCA in parallel to the conveyor reduces protrusion and eliminates wasted space.**

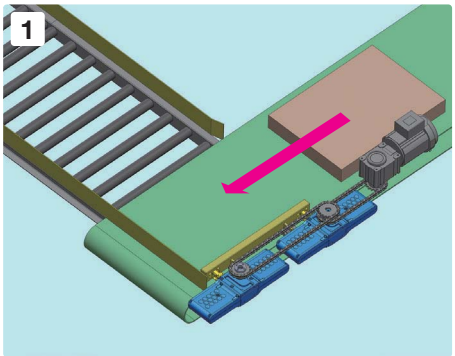

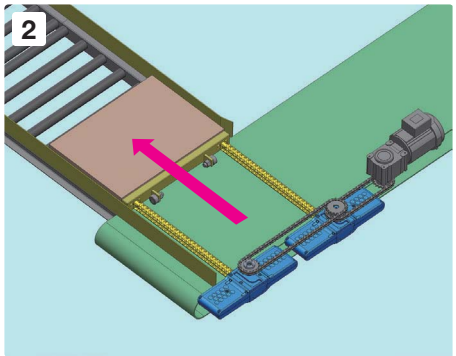

Horizontal Pushing / Pulling Applications

▶ Multi-stage In-line Guide Pusher

Before

▶ Guide shafts and pneumatic cylinders were used together to manufacture a pusher used as sorting equipment for products carried from a conveyor.

Problem

▶ There is a large amount of protrusion from the conveyor side, preventing installation against walls.

▶ They wanted to do away with pneumatics.

Solution

▶ In-line guides were combined in multiple stages and used in combination with a ZCA.

▶ Compact: Protrusion toward the conveyor side is reduced, making it possible to install against walls. Using multi-stage in-line guides in combination allows users to take advantage of the compactness of the ZCA.

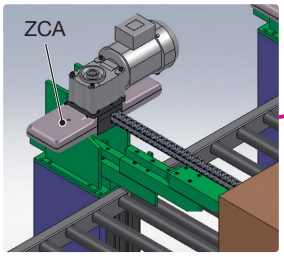

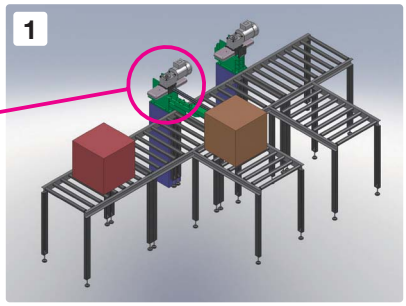

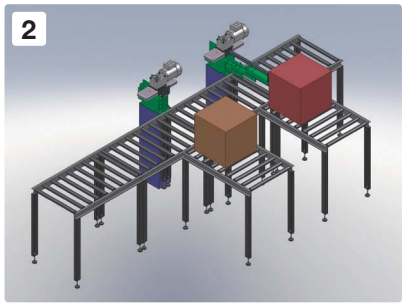

▶ Press Die-set Step Changing Equipment

Before

▶ Workers needed to push and pull the die-sets manually.

Problem

▶ Due to the heavy loads, there is a great burden on workers.

Solution

▶ Pushing and pulling of the die-set could be automated.

▶ Compact: There is no protrusion, making it possible to set up on the wall side and save space.

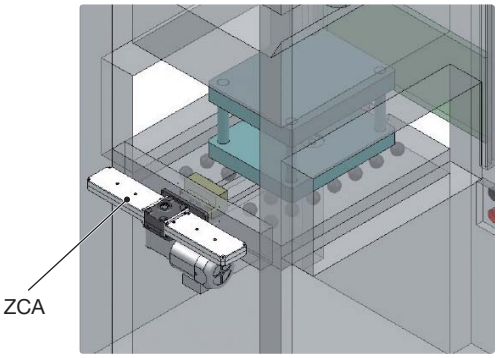

Press rear surface

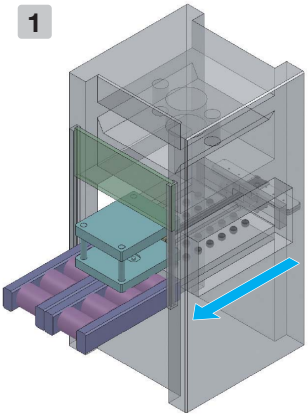

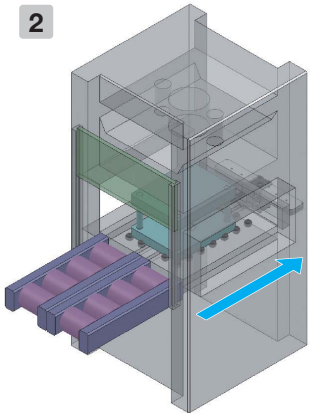

Hoisting and Hanging Applications

▶Carriage for Transferring Between Conveyors (Mounted on overhead travelling carriage)

Before

▶ Pneumatic cylinders were mounted on the overhead travelling carriage, and panels to be assembled to the unit were hoisted up.

Problem

▶ The external cylinder of the pneumatic cylinder protrudes, so extra space was required on the ceiling side.

▶ Conveyed objects wobble, damaging workpieces and making it difficult to position panels.

Solution

▶ Compact: Can be stored within the carriage.
No more protrusion, making the extra ceiling space unnecessary.
The center of gravity for the carriage can be lowered, so conveyed objects no longer wobble.

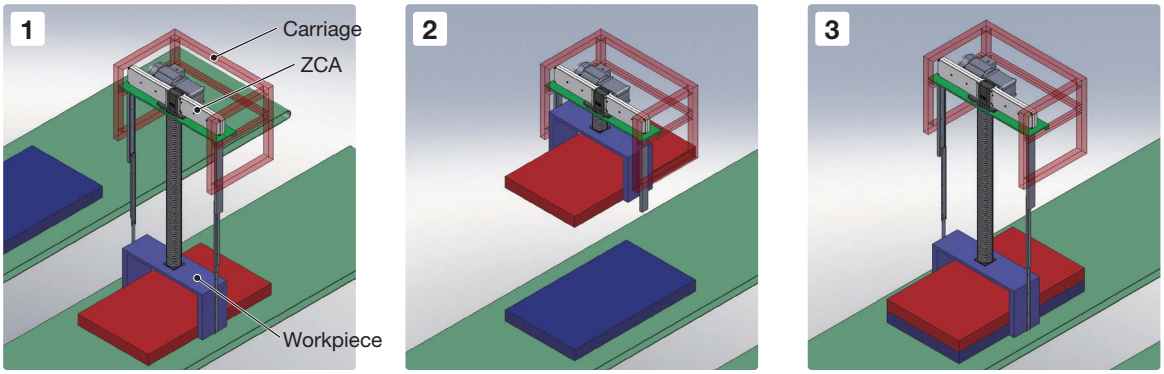

▶Opening and Closing of Doors Inside a Furnace (Vertically)

Before

▶ An electric jack was used to store (move up and down) the partition doors inside the furnace.

▶ It was necessary to pull out the doors when performing maintenance.

Problem

▶ Large amount of protrusion toward the ceiling.

▶ Distance between the jack and ceiling is small, so the door can not be pulled out unless the jack was removed.

▶ Work in higher locations takes a long time and a large amount of labor to complete.

Solution

▶ Compact: Little protrusion toward the ceiling, so extra space is not taken up.

▶ The door can be pulled out without removing the ZCA.
(Work time was also shortened)

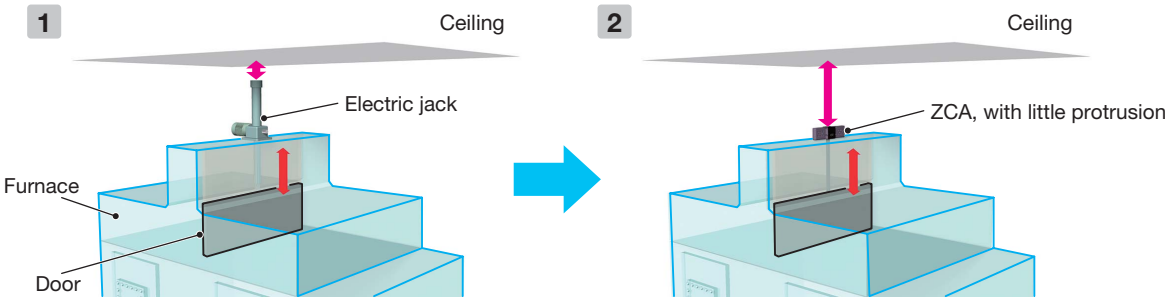

Lifting Applications

▶ Automatic Processing Machine Lifting Equipment

Before

- Processing was performed by the workers manually.
- There was also a need to increase production capacity, but adding more workers was difficult.

Problem

- **Takes a long time to setup, and there are deviations depending on the skill of the worker.**

Solution

- **Using ZCA, we have created our own automatic processing machine.**
- **Compact: Connecting the motor directly has given the whole device a simpler structure.**
- **Multi-point stopping: By combining encoders, it has become possible to stop with a high level of accuracy. As a result, quality is stabilized.**

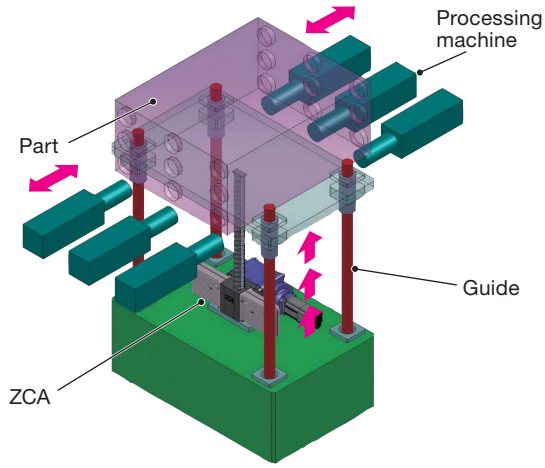

▶ Product Boxing Lines – Conveyor End Shaking Equipment

Before

- Products coming off the floor conveyors were boxed manually.
- The conveyor height was fixed. Box sizes also varied, and the workers needed to lift the products in accordance with the size of the box.

Problem

- **There is a heavy burden on workers to lift the product to a high position.**

Solution

- **Modifications were made to the shaking mechanism at the end of the conveyor. The height of the conveyor inlet can be adjusted according to the height of the box.**
- **Compact: Can be installed as is under the conveyor.**
- **Controllability: Thanks to direct lifting by the chain, it is easier to position than simple pantograph types.**

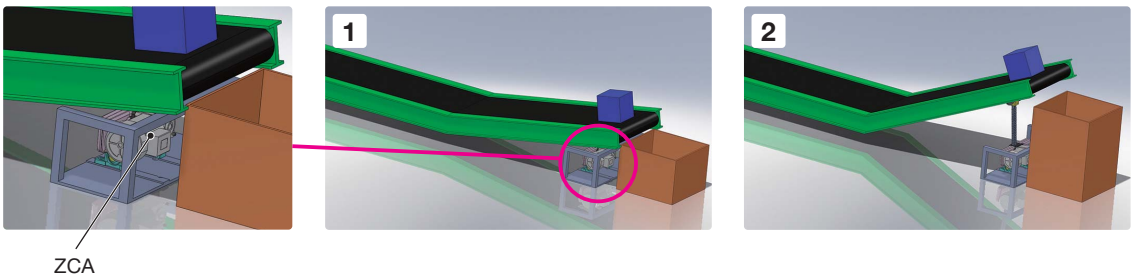

Module Service (Combined products)

We will make optimal selections and propose modules with combined functions from the Tsubaki Group's diverse product lineup in order to meet customer needs.

Scan here for details

Vertically ZIP CHAIN ACTUATOR + Horizontal ZIP CHAIN ACTUATOR

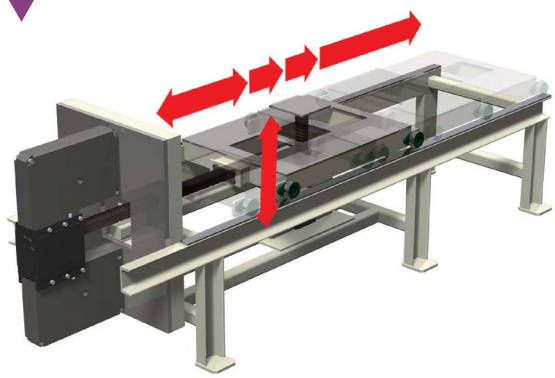

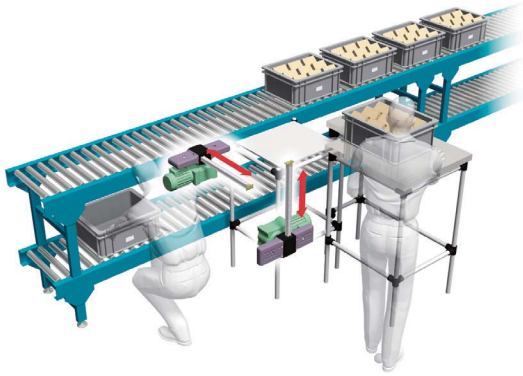

Point

- Pitless
- Space saving
- Reduced wiring

Scan here to view the video.

Point

- Pitless
- Compact
- Reduced work burden

Scan here to view the video.

Vertically ZIP CHAIN ACTUATOR + Horizontal Conveyor

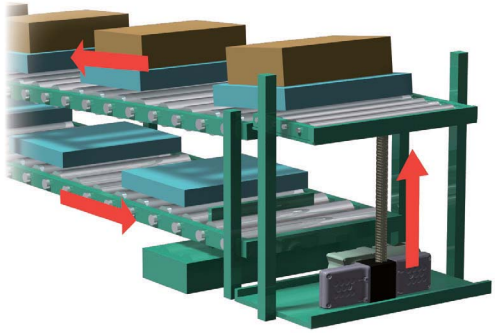

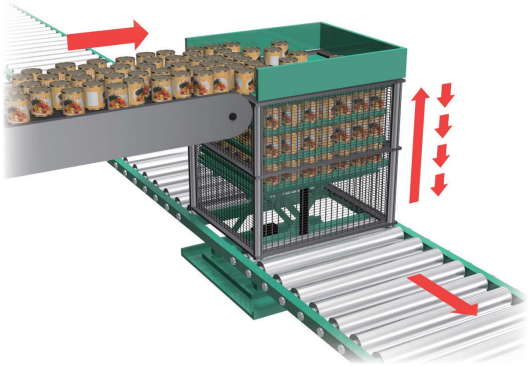

Point

- Low floor
- Pitless
- High speed/high frequency operation
- Reduced maintenance

Scan here to view the video.

Point

- No hydraulic or pneumatic pressure
- High speed/high frequency operation
- Reduced maintenance

Scan here to view the video.

ZIP CHAIN ACTUATOR®

What is ZIP CHAIN® ?

ZIP CHAIN is two strands of chains that interlock in a zipper-like fashion to form a single, strong column that enables push/pull operation over long strokes. The unzipped chain can be compactly housed for far more space savings than with conventional pneumatic and hydraulic cylinders. ZIP CHAIN has many features, including high speed/high frequency operation, multipoint stopping functions, high stopping precision, free mounting direction, and eco-friendliness. They can be used in everything from small actuators to large lifters.

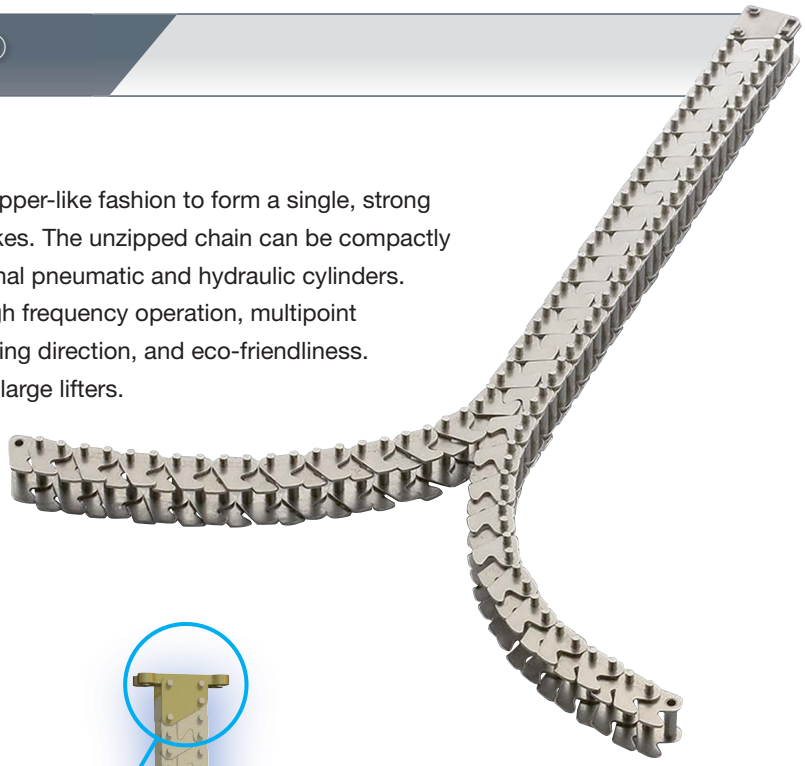

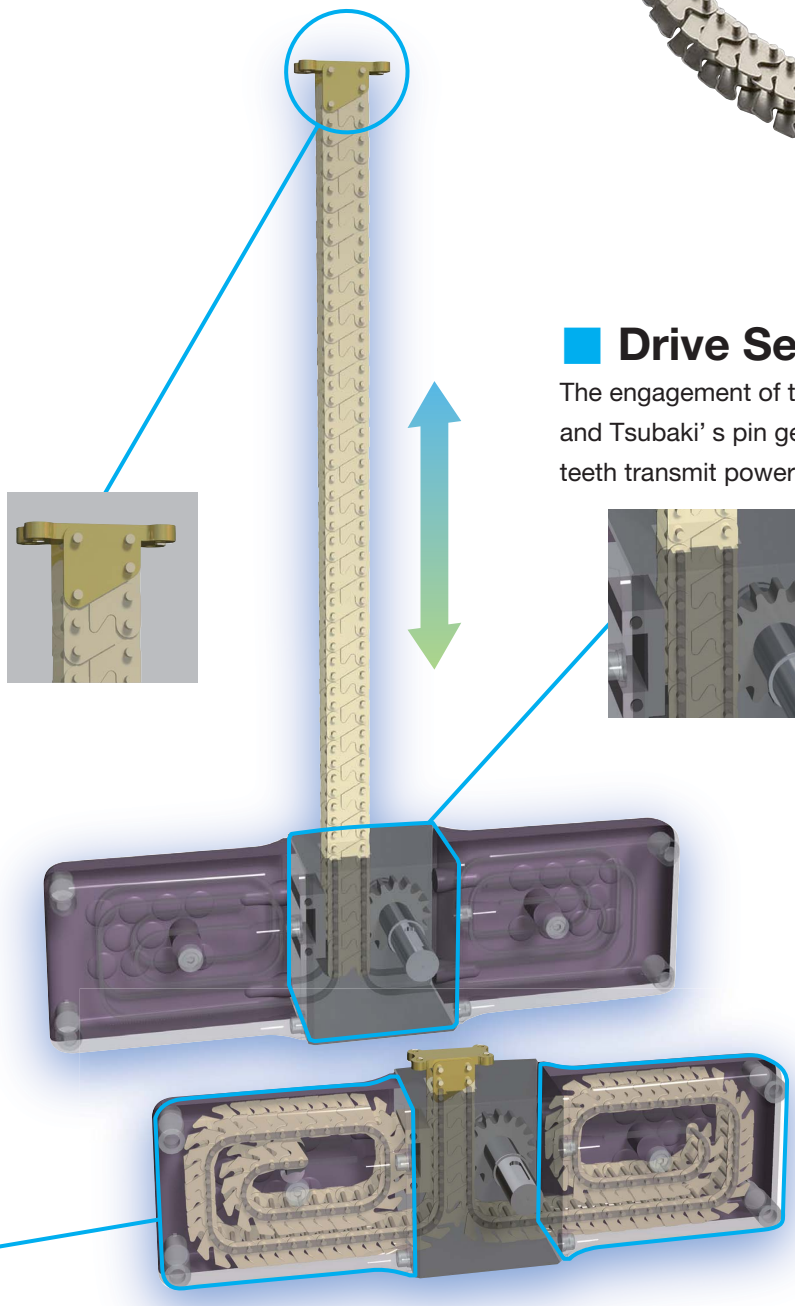

Drive Section

The engagement of the ZIP CHAIN and Tsubaki' s pin gear with special teeth transmit power efficiently.

Chain

End fixture

is integrated with the chain.
Can be attached from above or below.

Housing section

The sliding section of the chain is made of plastic, for smooth and compact storage.

Features

1. Compact

Can be installed in tighter spaces than other linear actuators.
(Superior space savings)

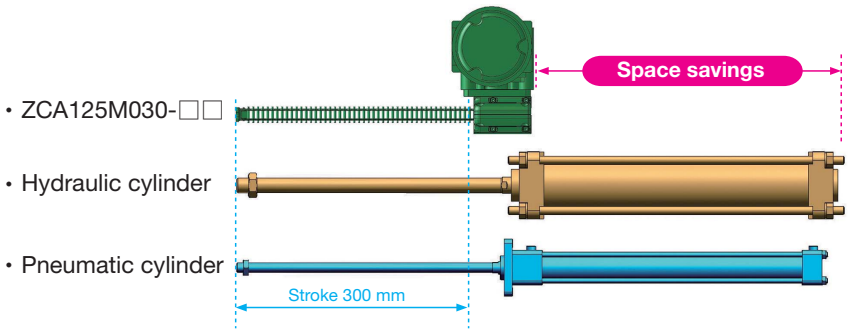

2. High speed

Much quicker operation compared to screw jacks and hydraulic/pneumatic cylinders. **(Max speed: 1000 mm/sec)**

3. Eco-friendly

Comparison of annual CO_2 emissions
ZCA:pneumatic cylinder:hydraulic cylinder: 1:3:5
Comparison of annual power consumption
ZCA:pneumatic cylinder:hydraulic cylinder: 1:5:14

LCA Evaluation
*Calculated using Tsubaki's internal **LCA** evaluation.

CO_2 emissions of various linear actuators [kg-CO_2]

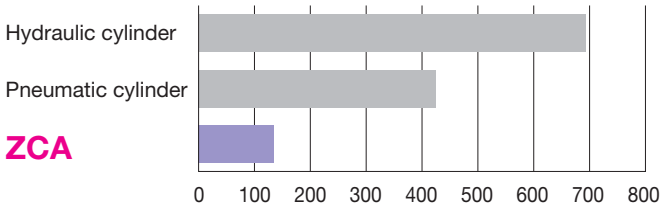

Annual power consumption

The ZCA uses 1/14 the power of a hydraulic cylinder.

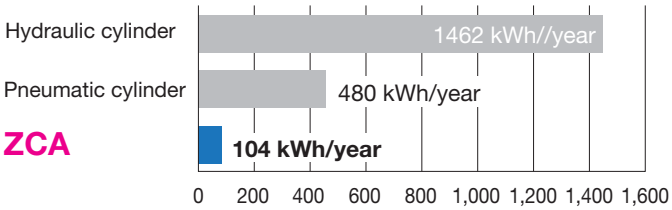

- **Comparison conditions**
  Thrust: 1 kN
  Speed: 200 m/s
  Stroke: 500 mm
  1 cycle/min. x 12 hrs x 250 days/year Includes various drives (induction motor, pneumatic/hydraulic units)
- **For comparison purposes. Conveyor disposal/recycling are considered equal and have been omitted from the LCA evaluation.**
- **Reference: Japan Environmental Management** Association for Industry
  MiLCA Ver. 1.20, Tsubaki catalogs, etc.

4. Multipoint stopping

Can be stopped at multiple arbitrary positions with high precision.

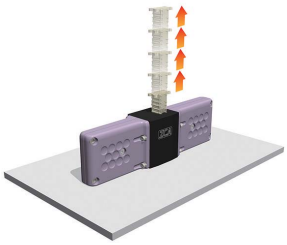

5. Free mounting directions

Lifting installation | Horizontal installation | Horizontal installation | Hanging installation

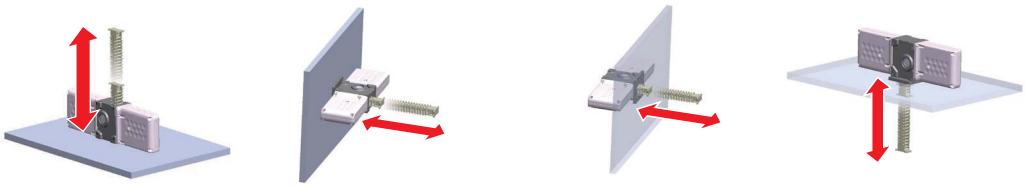

Install a linear guide along the direction of travel.
For hanging installations, you will need to confirm the safety of the installation.

Model Numbering

ZCA 135 M 050 - 2G

Zip Chain Actuator

Model no.

125
135
145

Motor

M	With motor (200 V class)
N	Without motor

- 400 V class motors made-to-order. See page 17 for ZCA125 motor voltage and page 23 for ZCA135 motor voltage.
- ZCA145 is not available with a motor. Please consider the motor separately. (ZCA145 is N: Without motor only)

Stroke

Housing no.	Code	Allowable stroke mm
125	030	300
	050	500
135	050	500
	075	750
	100	1000
145	100	1000
	150	1500
	200	2000

Motor capacity, reduction ratio

Select the model number from the characteristic table on page 17 for the ZCA125 and page 23 for the ZCA135. (There is no description for ZCA145)

Installation direction When selecting options you will need to indicate U, YS, YB or DB.

Mounting method	U	Y		D
Option		B	S	B
	U: Lifting installation	YB: Horizontal installation	YS: Horizontal installation	DB: Hanging installation

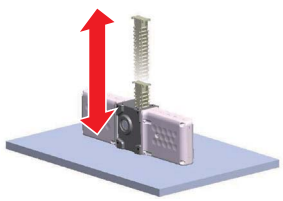

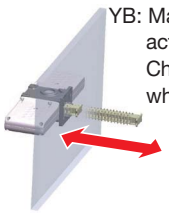

YB: Maximum load acts on the Zip Chain Actuator when pulling

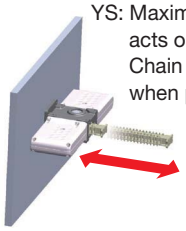

YS: Maximum load acts on the Zip Chain Actuator when pushing

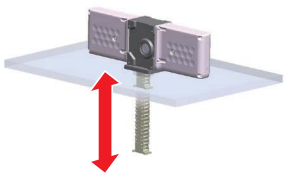

Be sure to always install a linear guide along the direction of travel.

List of Models

Models without motor

Model number*1	Basic capacity*2 N{kgf}	Allowable stroke*3 mm	Maximum speed*4 mm/s	Maximum input rotation speed r/min	Allowable input shaft torque N•m{kgf•m}	Allowable overhang load N{kgf}	Zip Chain movement amount per input shaft rotation mm	Approximate mass kg
ZCA125N030	400 {40.8}	300	1000	630	9.41 {0.96}	638 {65.0}	95.3	1.9
ZCA125N050	330 {33.6}*5	500						2.5
ZCA135N050	1000{102.0}	500	1000	420	34.7 {3.53}	946 {96.4}	142.9	5.1
ZCA135N075	1000{102.0}	750						6.5
ZCA135N100	600 {61.2}*6	1000						7.5
ZCA145N100	2000{204.0}	1000	500	125	116.6 {11.9}	2065 {210.5}	240	21
ZCA145N150	2000{204.0}	1500						25
ZCA145N200	1200{122.5}*7	2000						30

*1 Model numbers indicated in bold letters are stocked products.
*2 Values represent basic capacities with an end fixture attached. Contact a Tsubaki representative regarding any other installation fixture requirements. Values are obtained when operated at a maximum 0.35 G (upper limit) acceleration. These values are applicable regardless of the type of installation (vertical, horizontal, hanging).
*3 Use the unit within the allowable stroke range. Also, be sure to always attach a linear guide in the direction of travel.
*4 Zip Chain speed at maximum input rotation speed.
*5 ZCA125: Limit basic capacity to 300 N {30.6 kgf} or less for 500-mm stroke models with bellows.
*6 ZCA135: Limit basic capacity to 431 N {44.0 kgf} or less for 1000-mm stroke models with bellows.
*7 ZCA145: Limit basic capacity to 900 N {91.8 kgf} or less for 2000-mm stroke models with bellows.

With motor

See page 17 for ZCA125, and page 23 for ZCA135. ZCA145 is not available with a motor. Please consider the motor separately.

Option codes

U B R J T C F P

Options not shown are made-to-order.

Options

F: Grease plates

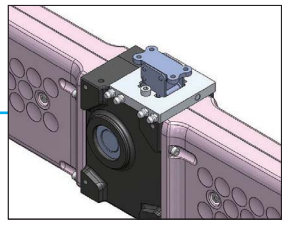

C: Cap (for ZCA135 and ZCA145 only)

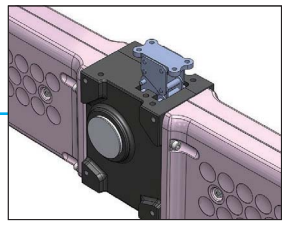

T: Dual shafts

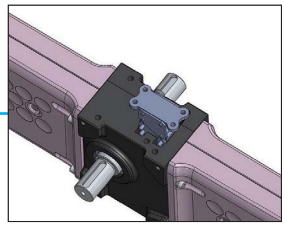

S: Bottom mounting base

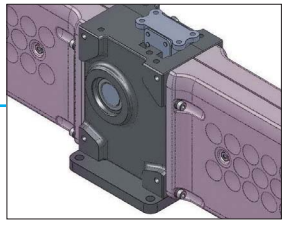

Options
(common for all models)

J: Bellows (for lifting and hanging installations)

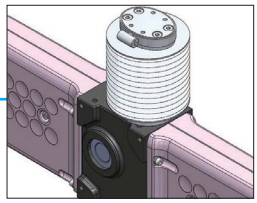

R: Input shaft on the opposite side

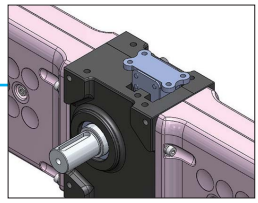

B: Mounting base (for hanging installations)

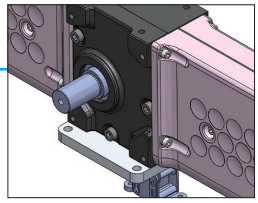

Options shown for ZCA135.
When combing a motor with dual shafts or input shafts on the opposite sides, see page 28 for motor installation directions.
Y: Horizontal installation combined with either
B: Mounting base or S: Bottom mounting base is standard.

Specifications

Drive section	Material	Cast iron (ZCA125, ZCA135, ZCA145)	
	Coating color	Black, Munsell N2.0 equivalent	
Housing section	Material	Polyacetal (ZCA125, ZCA135) Steel (ZCA145)	
	Color	ZCA125□030 ZCA125□050 ZCA135□050 ZCA135□075 ZCA135□100	Purple grey Munsell 0.8P6.3/3.0 equivalent (molded)
		ZCA145N100 ZCA145N150 ZCA145N200	Black, Munsell N2.0 equivalent
Chain	Material	Aloy steel (ZCA125, ZCA135, ZCA145)	
Lubricant	Grease		

Operating Environment Requirements

Operating temperature	Without motor	0 to 60°C
	With motor	0 to 40°C
Relative humidity	85% or less (no condensation)	
Altitude*	1000 m or less above sea level	
Ambient atmosphere	Typical rain-free indoor environment with the amount of dust kept at a general factory level.	
Installation direction	The unit can be hung or mounted vertically or horizontally. However, regardless of the installation direction, be sure to mount a linear guide in the direction of travel. A mounting base is required to hang the unit. (Option codes: B)	

* For models with motors.

■Changes in Renewal Model ZCA125

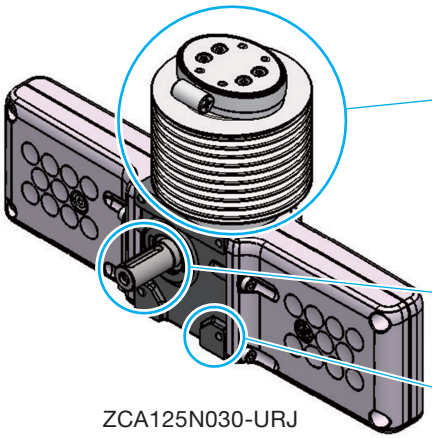

ZCA125N030-URJ

Bellows

- Adding bellows later is available thanks to change of bellows type and mounting method
  (Lifting and hanging installations) Adding bellows may shorten the allowable stroke
- Mounting the stainless steel band allows easy mounting and removal at maintenance

Input shaft

- Diameter of the input shaft identical for the basic model/opposite side model/dual shaft model

Mounting

- Tapped mounting hole added to side of drive section
  Increased flexibility for installation and expansion of the main body

Drive section side mounting method

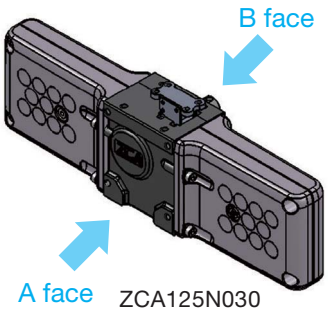

ZCA125N030

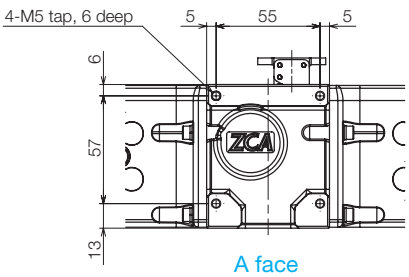

A face

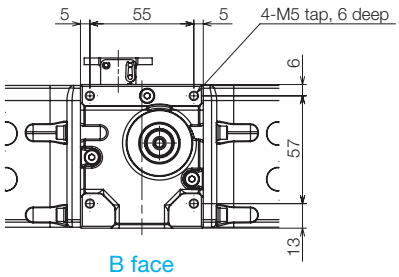

B face

External Dimensional Diagram　ZCA125N (without motor) Main Unit

■ ZCA125N030 050 (Basic model)

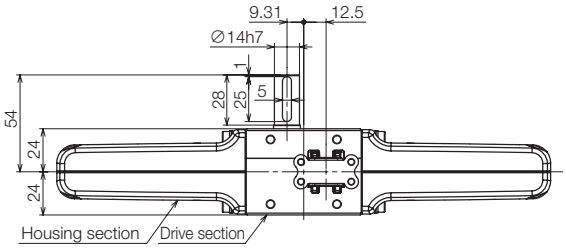

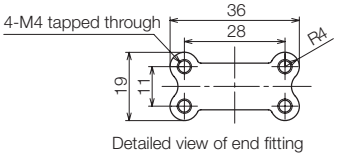

Detailed view of end fitting

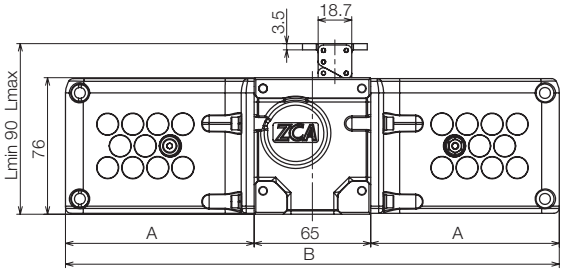

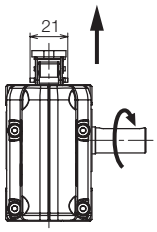

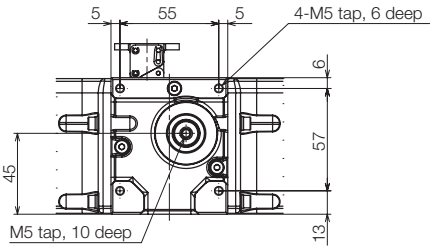

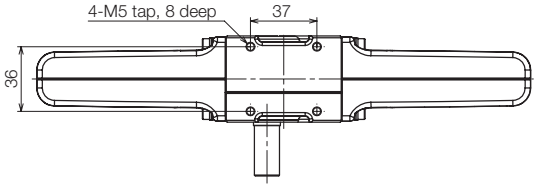

Model number	A mm	B mm	Lmax mm	Allowable stroke mm	Approximate mass kg
ZCA125N030	105	275	390	300	1.9
ZCA125N050	149	363	590	500	2.5

External dimensional diagram is for ZCA125N030. The shape of the 050 housing section differs. See page 28 for option combinations.

■ ZCA125N030 050-□S (Bottom mounting base)

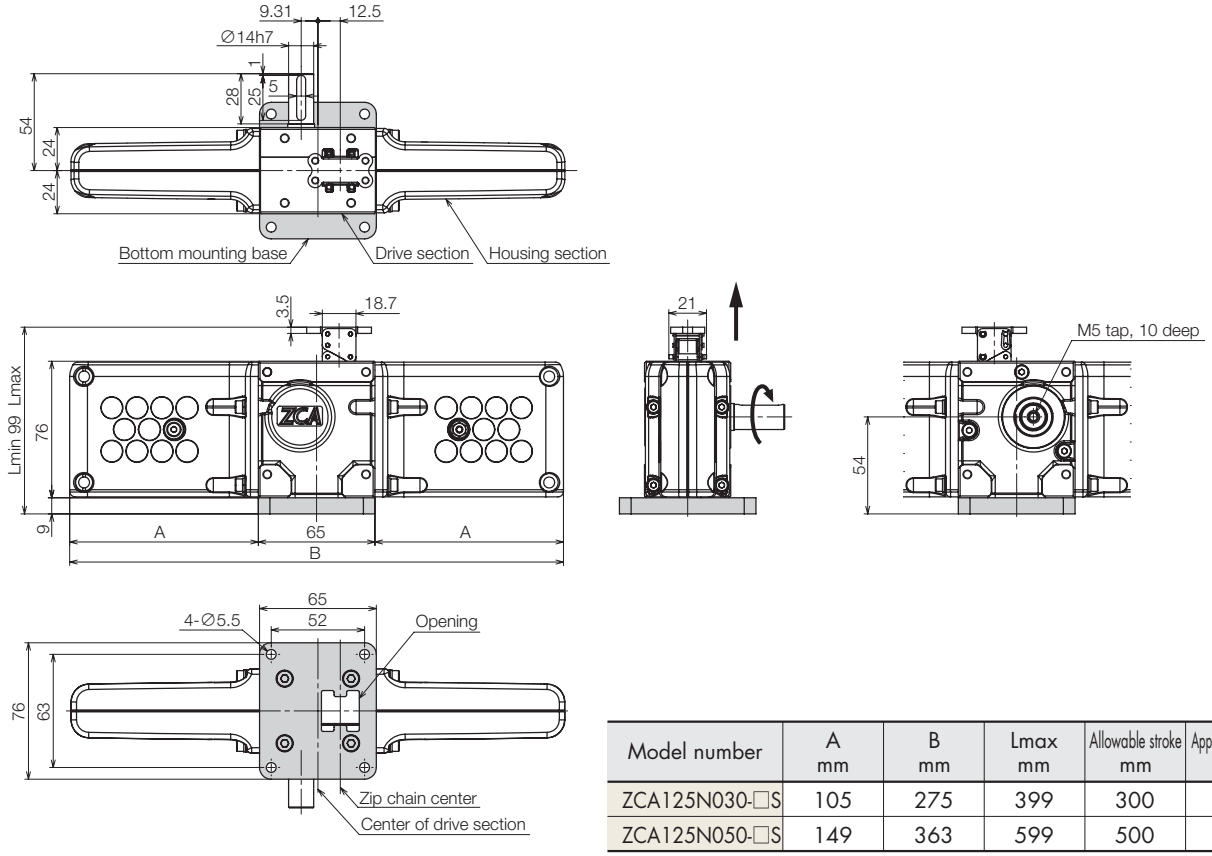

Model number	A mm	B mm	Lmax mm	Allowable stroke mm	Approximate mass kg
ZCA125N030-□S	105	275	399	300	2.5
ZCA125N050-□S	149	363	599	500	2.5

External dimensional diagram is for ZCA125N030-□S. The shape of the 050 housing section differs. See page 28 for option combinations.

■ ZCA125N030 050-□B (Mounting Base)

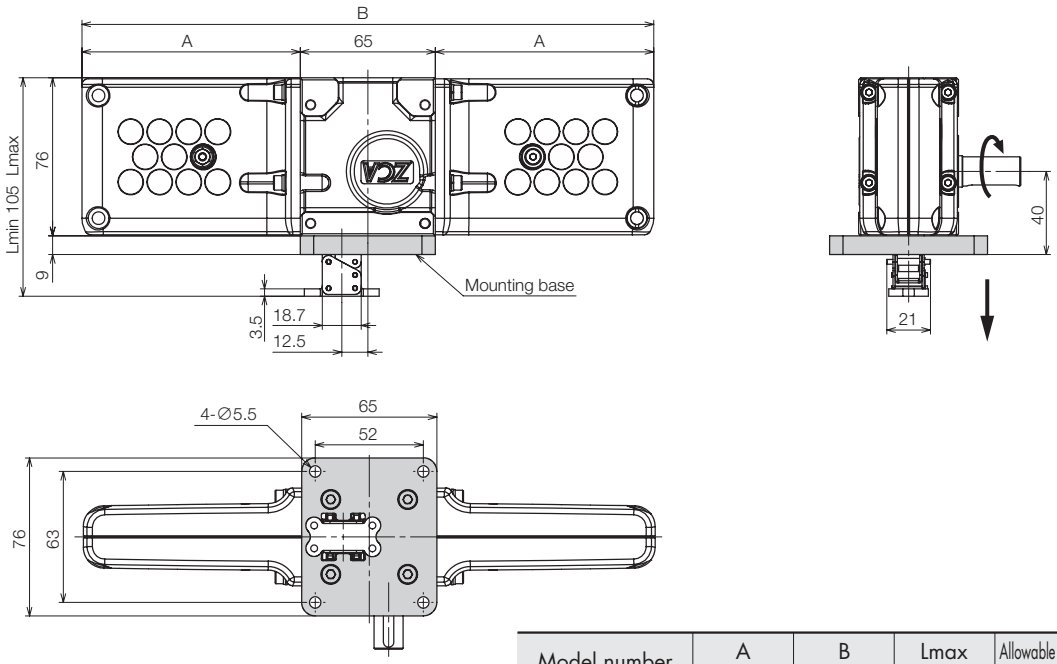

Model number	A mm	B mm	Lmax mm	Allowable stroke mm	Approximate mass kg
ZCA125N030-□B	105	275	405	300	2.5
ZCA125N050-□B	149	363	605	500	2.5

External dimensional diagram is for ZCA125N030-□B. The shape of the 050 housing section differs. See page 28 for option combinations.

■ ZCA125N030 050-□R (Input shaft on the opposite side)

The mounting taps on the drive section base are the same as with the basic model.

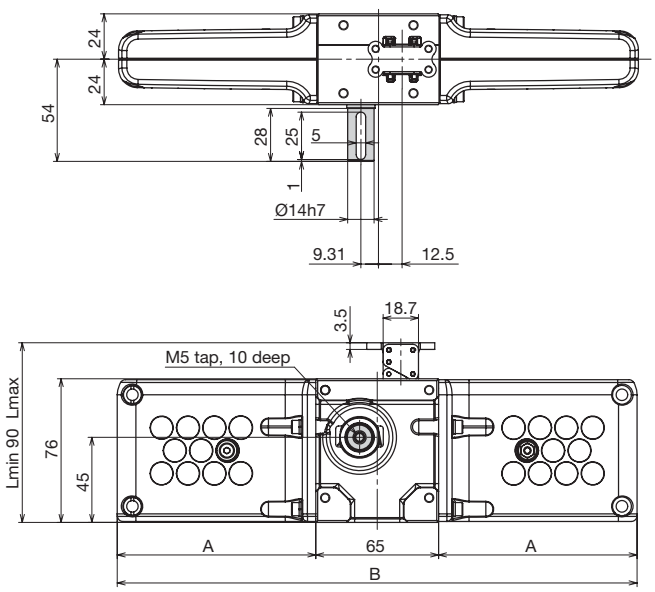

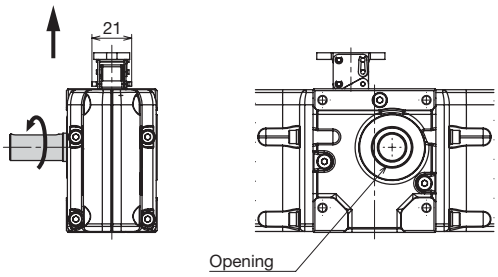

Model number	A mm	B mm	Lmax mm	Allowable stroke mm	Approximate mass kg
ZCA125N030-□R	105	275	390	300	1.9
ZCA125N050-□R	149	363	590	500	2.5

External dimensional diagram is for ZCA125N030-□R. The shape of the 050 housing section differs. See page 28 for option combinations.

■ ZCA125N030 050-□T (Dual Shafts)

The mounting taps on the drive section base are the same as with the basic model.

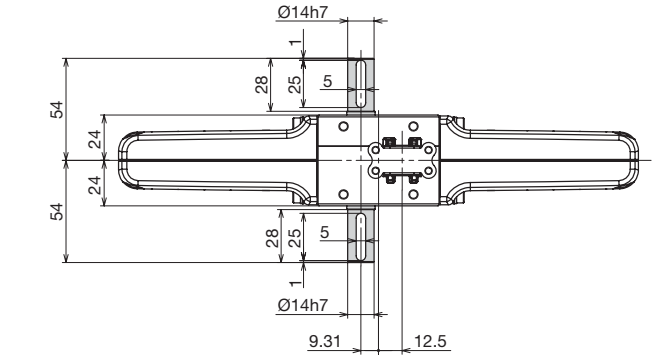

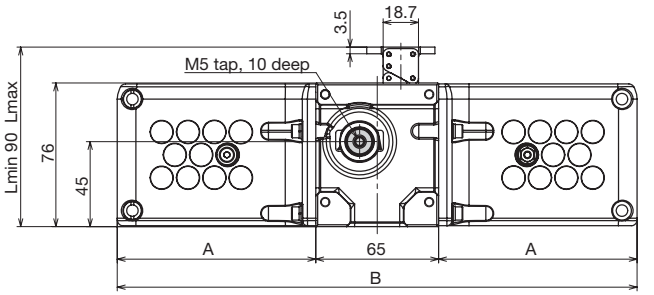

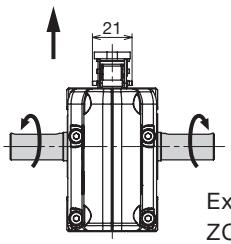

External dimensional diagram is for ZCA125N030-□T. The shape of the 050 housing section differs.
See page 28 for option combinations.

Model number	A mm	B mm	Lmax mm	Allowable stroke mm	Approximate mass kg
ZCA125N030-□T	105	275	390	300	2
ZCA125N050-□T	149	363	590	500	2.5

Pay special attention to the input torque when the ZCA is connected in parallel by means of a shaft (see page 30).

■ ZCA125N030 050-□J (Bellows)

External dimensional diagram for bellows for lifting installations.
Bellows can only be installed later with lifting/hanging installations.
The allowable stroke will change if bellows are attached later.
Bellows for hanging installations are paired with a mounting base.
Contact a Tsubaki representative regarding external dimensional drawings.

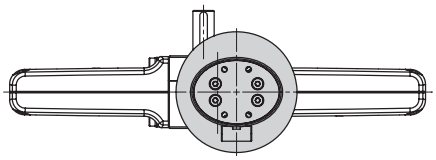

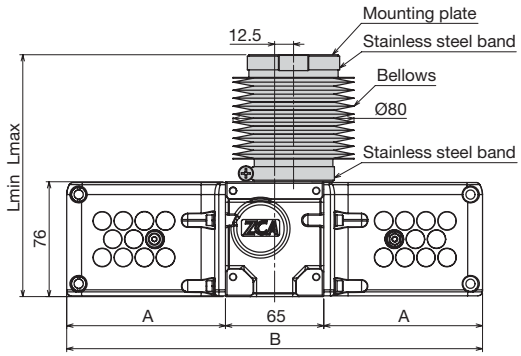

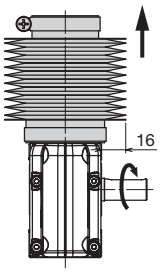

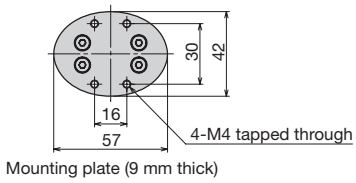

Please note that the bellows for the older ZCA025 and ZCA125 differ in size, shape, and installation method and are not compatible.
External dimensional diagram is for ZCA125N030-□J. The shape of the 050 housing section differs.
See page 28 for option combinations. The mounting taps on the drive section base are the same as with the basic model.

Bellows	Material	Thermoformed polyurethane
	Color	Black

Bellows using different material are made-to-order.
Bellows for horizontal installations (Y) are manufactured separately.
Contact a Tsubaki representative for more information.

Model number	A mm	B mm	Lmax mm	Lmin mm	Allowable stroke mm	Basic capacity N {kgf}	Approximate mass kg
ZCA125N030-□J	105	275	160	460	300	400 {40.8}	2.5
ZCA125N050-□J	149	363	180	680	500	300 {30.6}	2.5

*Limit basic capacity to 300 N {30.6 kgf} or less for 500-mm stroke models with bellows.

■ ZCA125N030 050-□F (Grease Plate)

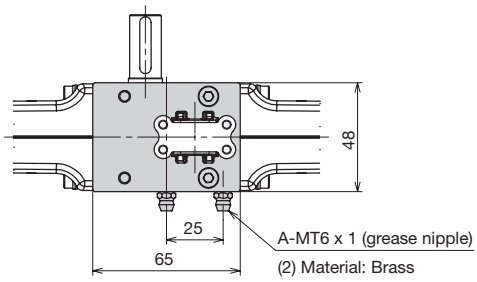

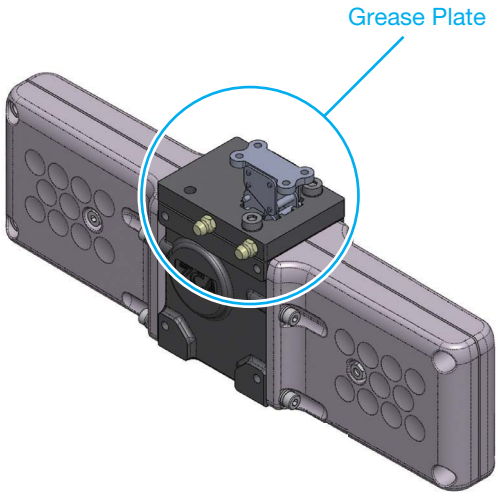

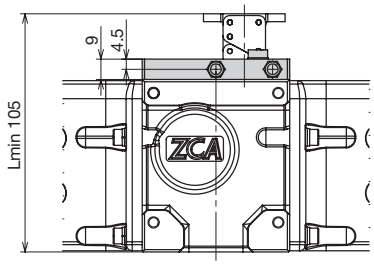

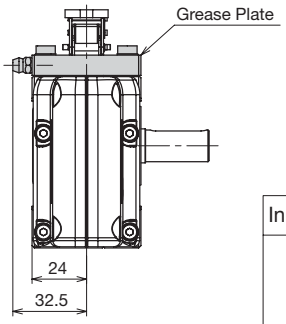

The grease plate cannot be retrofitted.
Can be combined with bellows and mounting bases.
(Contact a Tsubaki representative when using together with a mounting base.)
Grease plates come with grease nipples.
Grease plates that can be attached on either side are made-to-order.
Grease plates aid in chain lubrication.
Grease the nipples in 2 locations.
Refer to the operator's manual for greasing methods.
Has the same allowable stroke as the ZCA125N (basic model).

Input shaft on the opposite side	Dual Shafts
Greasing directions 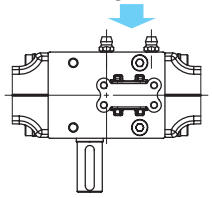	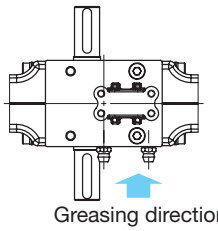 Greasing directions

When attaching grease plates to input shafts on the opposite side or dual shafts, use the grease nipples as shown above. Grease in the direction of the arrows.

External Dimensional Diagram — ZCA025M (with motor) Main Unit

■ ZCA125M030 050-□□ (Basic model)

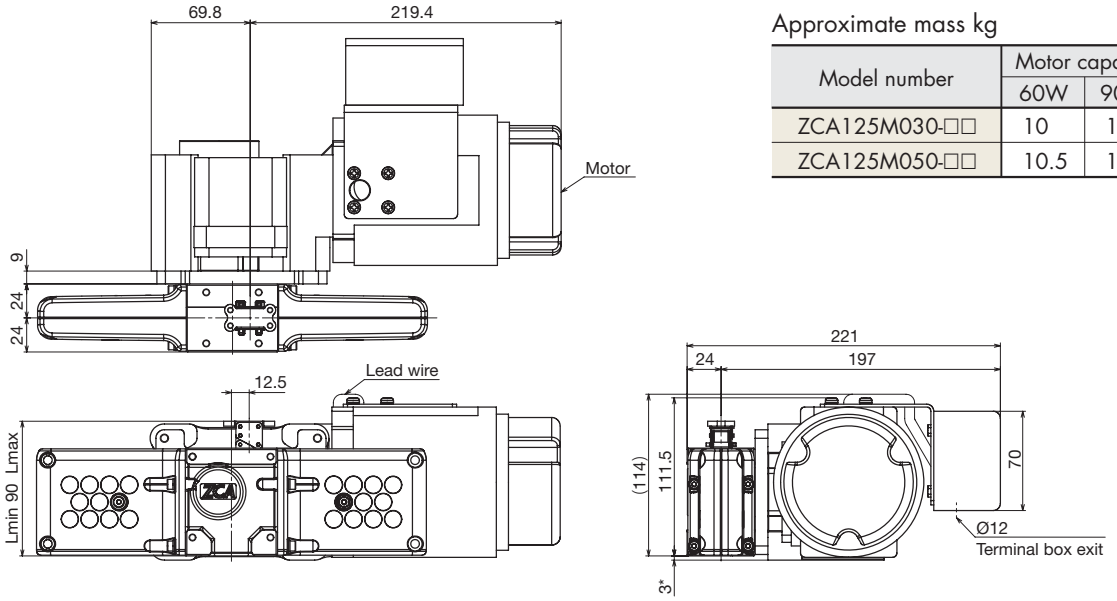

Approximate mass kg

Model number	Motor capacity	
	60W	90W
ZCA125M030-□□	10	10.5
ZCA125M050-□□	10.5	11

The mounting taps on the drive section base are the same as with the basic model.
* Be aware that the motor unit is larger than the drive section base.
*L*min, *L*max dimensions are the same as with the ZCA125N (without motor) basic model.

Motor Specifications and Features — ZCA125M (with motor)

■ Motor Specifications

Model number	ZCA125M
Output	3-phase: 60 W 90 W
Power source	200/200/220 V 50/60/60 Hz
Number of poles	4
Type of protection	Totally enclosed
Rating	Continuous
Insulation class	E
Type of brake	Power-off type, DC electromagnetic brake
Speed reducer lubrication	Grease lubrication
Coating color	Light grey (Munsell N7.5 equivalent)

- Operation using an inverter
  The motor for the ZCA125M is not microsurge resistant.
  A 200 V-class motor can be driven from the inverter unless it is operated at low-frequencies or a frequency of 60 Hz or higher.
  (400 V-class motors cannot be driven from the inverter regardless of operating conditions.)
  When applying brakes, be sure to keep the frequency below 60 Hz (1800 rpm).
- Refer to the Tsubaki small gear motor 40 W – 5.5 kW.
- ZCA units with 400V-class motors are made-to-order.

Motor direction of rotation ( ) and chain direction of travel ( )
(when a motor is attached to the ZCA basic model)

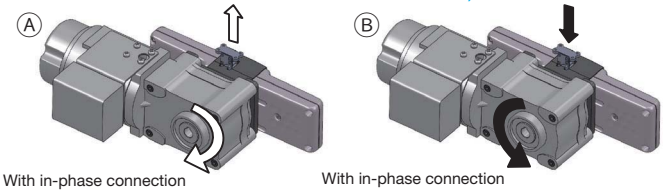

With in-phase connection　　With in-phase connection

■ ZCA (with motor) characteristics

Model type	Motor: Model number		Motor capacity	Reduction ratio	Thrust N{kgf} 50 Hz		Thrust N{kgf} 60 Hz		Speed mm/sec 50 Hz	Speed mm/sec 60 Hz	Allowable start-up frequency times/min. 50 Hz	Allowable start-up frequency times/min. 60 Hz	Chain direction of travel (see above)
ZCA125	6	B	60 W	1/8	88	{9.0}	69	{7.0}	303	365	10	10	Ⓐ
		C		1/10	127	{13.0}	98	{10.0}	243	292	10	10	
		D		1/15	216	{22.0}	167	{17.0}	162	195	10	10	
		E		1/20	294	{30.0}	245	{25.0}	122	145	10	10	
		F		1/25	382	{39.0}	314	{32.0}	97	117	10	10	
		G		1/30	*400	{*40.8}	382	{39.0}	82	97	10	10	
		H		1/40	*400	{*40.8}	*400	{*40.8}	60	73	10	10	
		J		1/50	*400	{*40.8}	*400	{*40.8}	48	58	9	10	
		K		1/60	*400	{*40.8}	*400	{*40.8}	40	48	8	9	
		L		1/80	*400	{*40.8}	*400	{*40.8}	30	37	6	7	Ⓑ
	9	A	90 W	1/5	78	{8.0}	59	{6.0}	485	583	4	10	Ⓐ
		B		1/8	157	{16.0}	127	{13.0}	303	365	10	10	
		C		1/10	216	{22.0}	167	{17.0}	243	292	10	10	
		D		1/15	343	{35.0}	274	{28.0}	162	195	10	10	
		E		1/20	*400	{*40.8}	382	{39.0}	122	145	10	10	
		F		1/25	*400	{*40.8}	*400	{*40.8}	97	117	10	10	
		G		1/30	*400	{*40.8}	*400	{*40.8}	82	97	10	10	

- Models marked with "*" have torque limits. The motor output shaft torque exceeds the upper limits of ZCA thrust.
- For ZCA125M050, limit the maximum thrust to 330 N {33.6 kgf} or less. However, models with bellows are limited to a maximum thrust of 300 N {30.6 kgf} or less.

External Dimensional Diagram — ZCA135N (without motor) Main Unit

ZCA135N050 075 100 (Basic model)

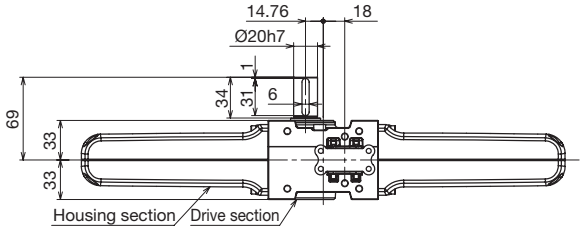

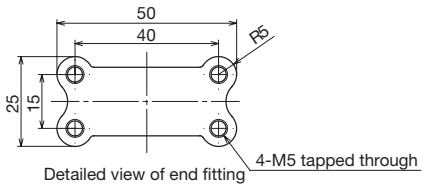

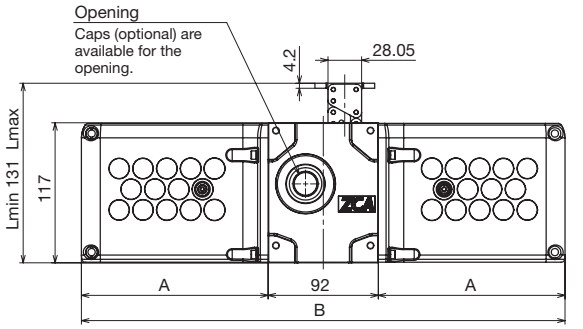

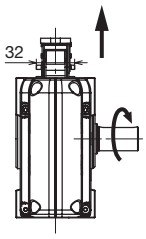

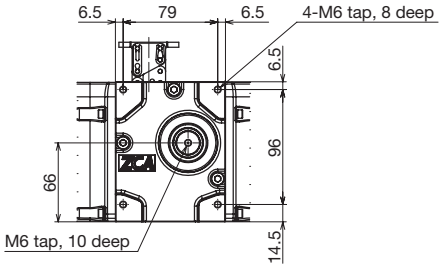

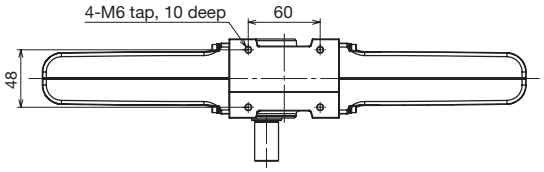

Model number	A mm	B mm	Lmax mm	Allowable stroke mm	Approximate mass kg
ZCA135N050	156	404	631	500	5.1
ZCA135N075	218.5	529	881	750	6.5
ZCA135N100	281	654	1131	1000	7.5

External dimensional diagram is for ZCA135N050. The shape of the 075 and 100 housing sections differ. See page 28 for option combinations.

External Dimensional Diagram — ZCA135N (without motor) Optional Parts

ZCA135N050 075 100-□S (Bottom mounting base)

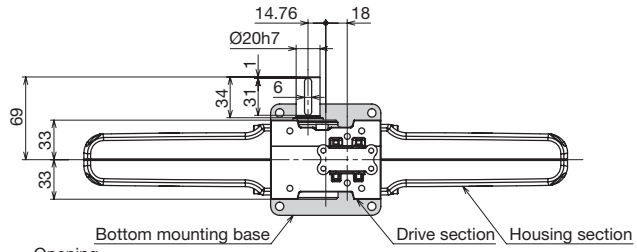

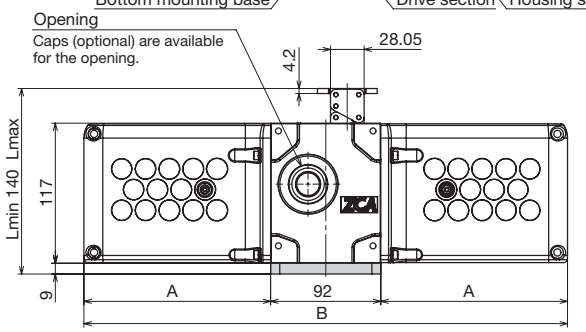

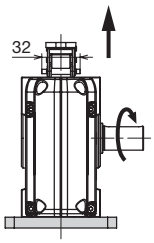

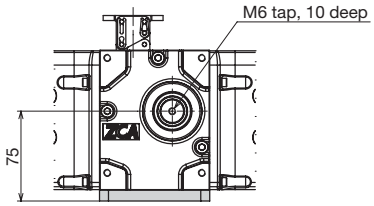

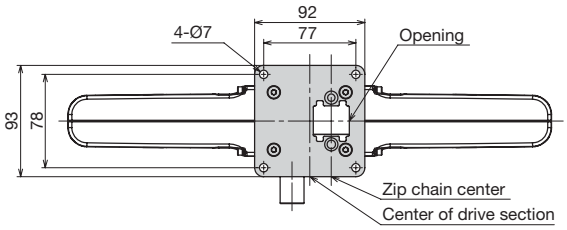

Model number	A mm	B mm	Lmax mm	Allowable stroke mm	Approximate mass kg
ZCA135N050-□S	156	404	640	500	5.5
ZCA135N075-□S	218.5	529	890	750	7.0
ZCA135N100-□S	281	654	1140	1000	8.0

External dimensional diagram is for ZCA135N050-□S. The shape of the 075 and 100 housing sections differ. See page 28 for option combinations.

■ ZCA135N050 075 100-□B (Mounting Base)

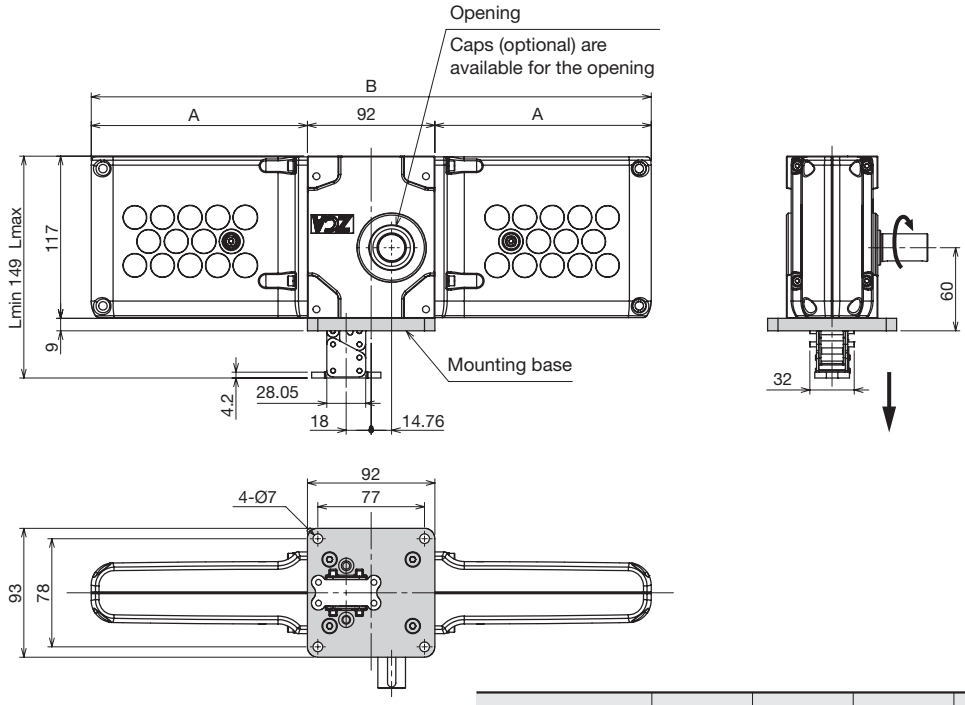

Model number	A mm	B mm	Lmax mm	Allowable stroke mm	Approximate mass kg
ZCA135N050-□B	156	404	649	500	5.5
ZCA135N075-□B	218.5	529	899	750	7.0
ZCA135N100-□B	281	654	1149	1000	8.0

External dimensional diagram is for ZCA135N050-□B. The shape of the 075 and 100 housing sections differ. See page 28 for option combinations.

■ ZCA135N050 075 100-□C (Cap)

Caps are available for the opening.
The drive section side opposite the shaft is open unless using dual shafts.

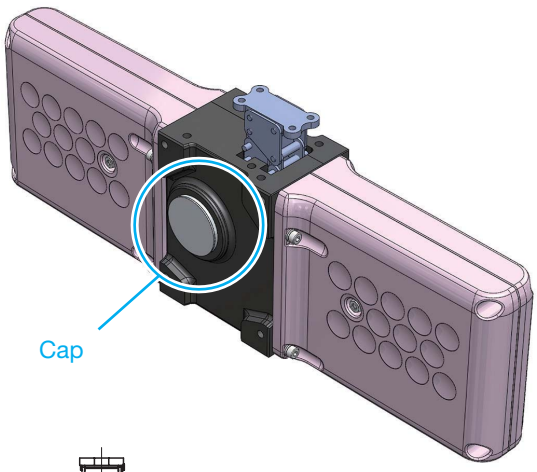

Dimensions with caps

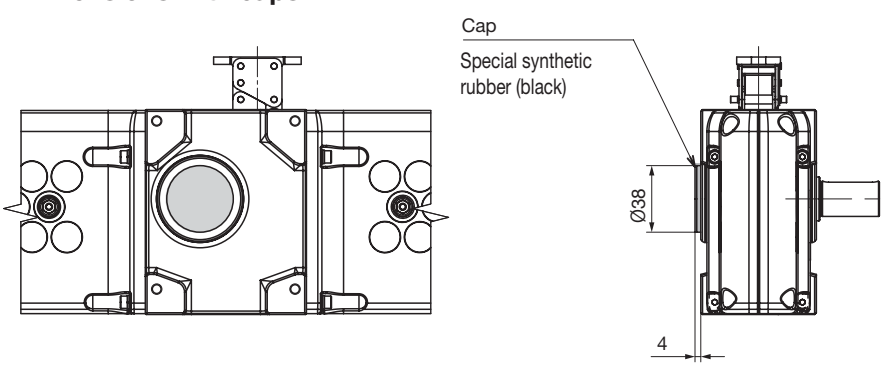

■ ZCA135N050 075 100-□R (Input shaft on the opposite side)

The mounting taps on the drive section base are the same as with the basic model.

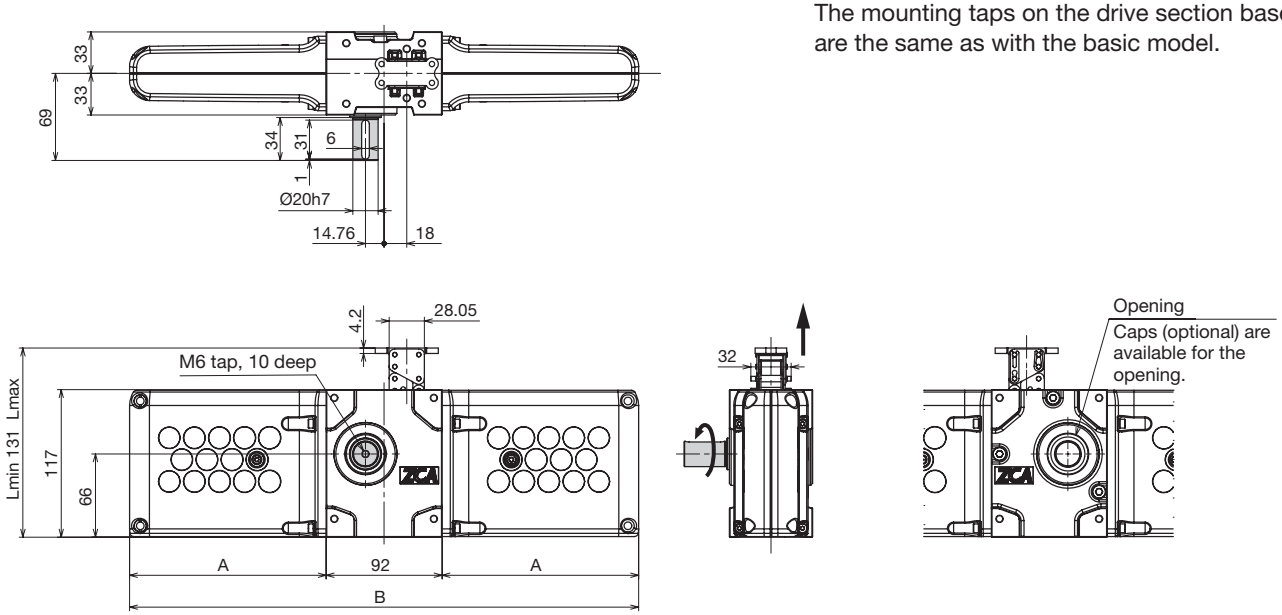

Model number	A mm	B mm	Lmax mm	Allowable stroke mm	Approximate mass kg
ZCA135N050-□R	156	404	631	500	5.1
ZCA135N075-□R	218.5	529	881	750	6.5
ZCA135N100-□R	281	654	1131	1000	7.5

External dimensional diagram is for ZCA135N050-□R. The shape of the 075 and 100 housing sections differ. See page 28 for option combinations.

■ ZCA135N050 075 100-□T (Dual Shafts)

The mounting taps on the drive section base are the same as with the basic model.

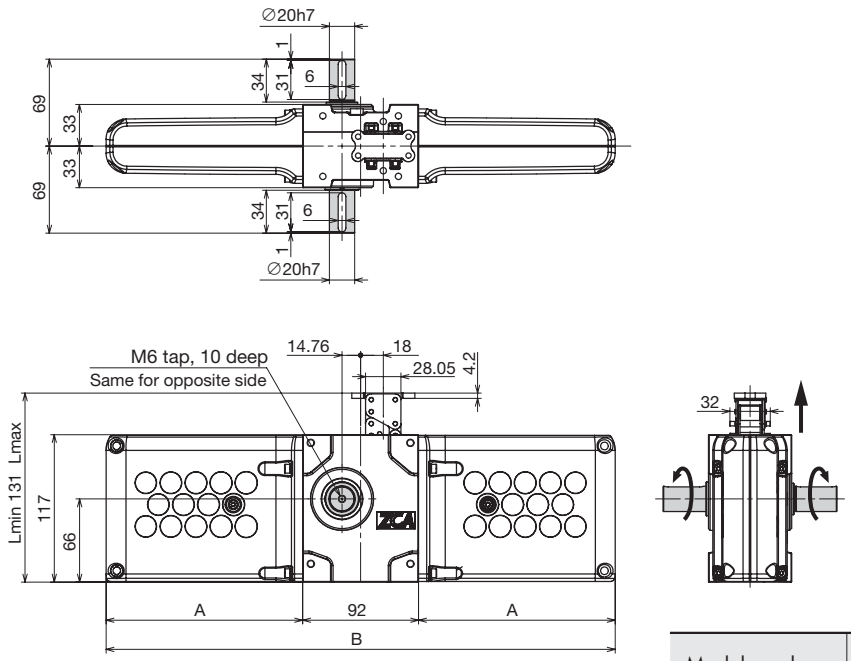

External dimensional diagram is for ZCA135N050-□T.
The shape of the 075 and 100 housing sections differ.
See page 28 for option combinations.

Model number	A mm	B mm	Lmax mm	Allowable stroke mm	Approximate mass kg
ZCA135N050-□T	156	404	631	500	5.5
ZCA135N075-□T	218.5	529	881	750	7.0
ZCA135N100-□T	281	654	1131	1000	8.0

Pay special attention to the input torque when the ZCA is connected in parallel by means of a shaft (see page 30).

■ ZCA135N050 075 100-□J (Bellows)

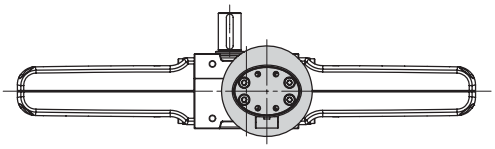

External dimensional diagram for bellows for lifting installations.
Bellows can only be installed later with lifting/hanging installations.
The allowable stroke will change if bellows are attached later.
Bellows for hanging installations are paired with a mounting base.
Contact a Tsubaki representative regarding external dimensional drawings.

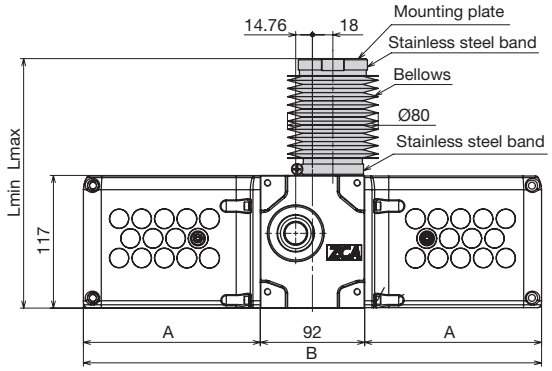

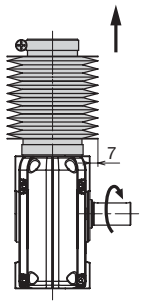

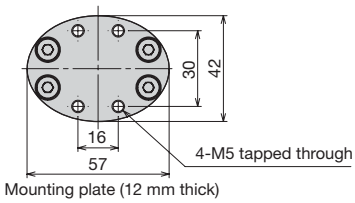

External dimensional diagram is for ZCA135N050-□J. The shape of the 075 and 100 housing sections differ.
See page 28 for option combinations.
The mounting taps on the drive section base are the same as with the basic model.

Bellows	Material	Thermoformed polyurethane
	Color	Black

Bellows using different material are made-to-order.
Bellows for horizontal installations (Y) are manufactured separately.
Contact a Tsubaki representative for more information.

Model number	*A* mm	*B* mm	*L*min mm	*L*max mm	Allowable stroke mm	Basic capacity N {kgf}	Approximate mass kg
ZCA135N050-□J	156	404	220	720	500	1000 {102.0}	5.5
ZCA135N075-□J	218.5	529	250	1000	750	1000 {102.0}	7.0
ZCA135N100-□J	281	654	270	1270	1000	431 {44.0}*	8.0

*Limit basic capacity to 431 N {44.0 kgf} or less for 1000-mm stroke models with bellows.

■ ZCA135N050 075 100-□F (Grease Plate)

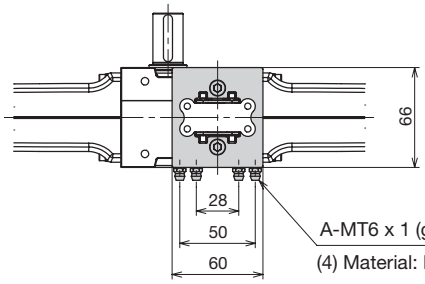

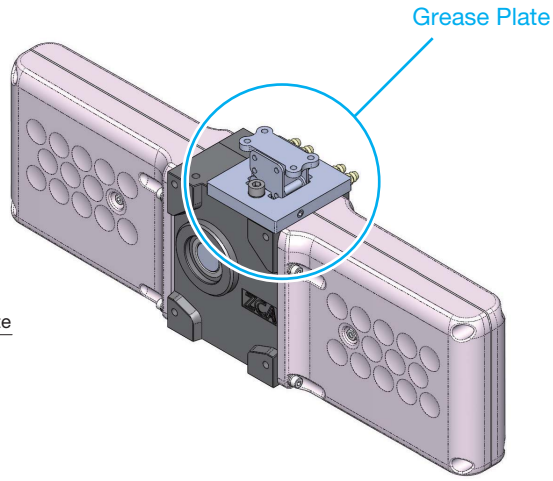

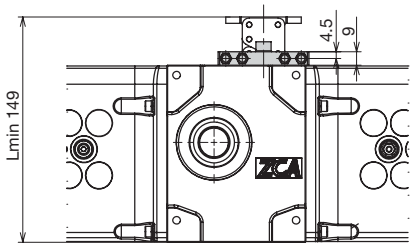

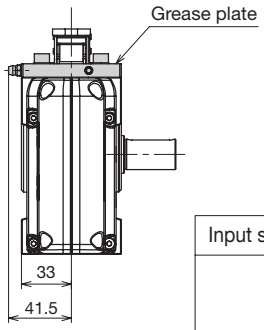

The grease plate cannot be retrofitted.
Can be combined with bellows and mounting bases.
(Contact a Tsubaki representative when using together with a mounting base.)
Grease plates come with grease nipples.
Grease plates that can be attached on either side are made-to-order.
Grease plates aid in chain lubrication.
Grease the plates using all four grease nipples.
Refer to the instruction manual for greasing methods.
Has the same allowable stroke as the ZCA135N (basic model).

Input shaft on the opposite side	Dual Shafts
Greasing directions 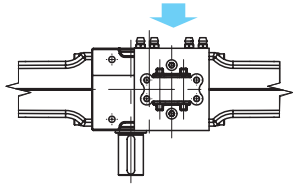	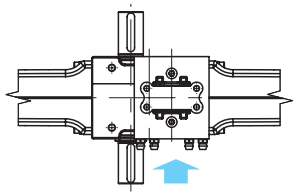 Greasing directions

When attaching grease plates to input shafts on the opposite side or dual shafts, use the grease nipples as shown above. Grease in the direction of the arrows.

External Dimensional Diagram — ZCA135M (with motor) Main Unit

■ ZCA135M050 075 100-□□ (Basic model)

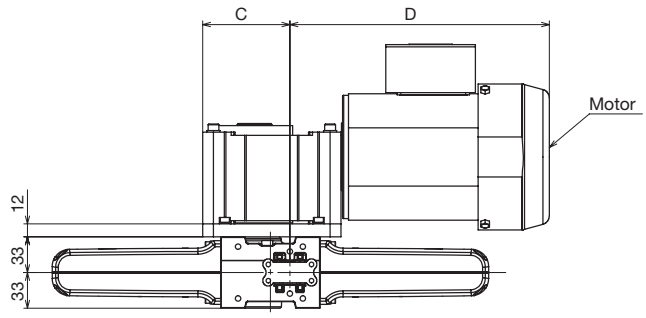

Approximate mass kg

Model number	Motor capacity		
	0.1 kW	0.2 kW	0.4 kW
ZCA135M050-□□	14	14	18
ZCA135M075-□□	15	15	19
ZCA135M100-□□	16	16	20

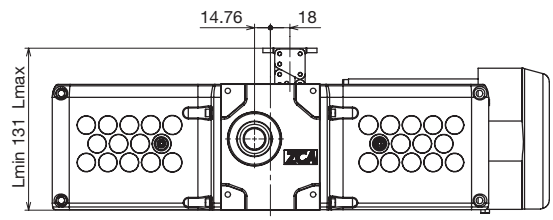

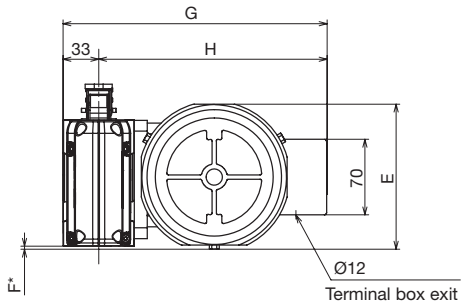

The position of the terminal box can be changed.
(Position can be changed on the ZCA135 only.)

The mounting taps on the drive section base are the same as with the basic model.
*Be aware that the motor unit is larger than the drive section base.
*L*min, *L*max dimensions are the same as with the ZCA135N (without motor) basic model.

Motor capacity kW	*C* mm	*D* mm	*E* mm	*F* mm	*G* mm	*H* mm
0.1	80.8	223.2	134.5	3.5	244.5	211.5
0.2	80.8	240.2	134.5	3.5	244.5	211.5
0.4	91.8	274.7	134.5	11.5	248.5	215.5

Note: Mounting bases and bellows are available for ZCA units with motors. However, the dimensions will be different from ZCA units without motors. Contact a Tsubaki representative for more information.

Motor Specifications and Features — ZCA135M (with motor)

■ Motor Specifications

Model number	ZCA135M
Output	3-phase: 0.1 kW 0.2 kW 0.4 kW
Power source	200/200/220 V 50/60/60 Hz
Number of poles	4
Type of protection	Totally enclosed
Rating	Continuous
Insulation class	E
Type of brake	Power-off type, DC electromagnetic brake
Speed reducer lubrication	Grease lubrication
Coating color	Light grey (Munsell N7.5 equivalent)

- When applying brakes, be sure to keep the frequency below 60 Hz (1800 rpm).
- ZCA units with inverter motors and encoders are made-to-order.
- Refer to the Tsubaki small gear motor 40 W – 5.5 kW.
- ZCA units with 400V-class motors are made-to-order.

Motor direction of rotation (↻・↺) and chain direction of travel (⇧・⬇)
(when a motor is attached to the ZCA basic model)

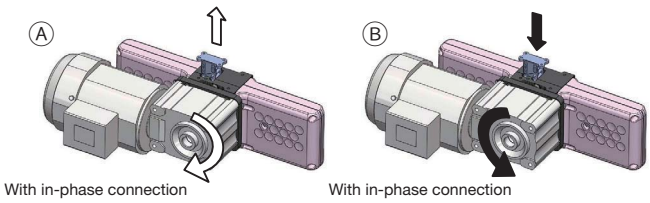

Motor Specifications and Features ZCA135M (with motor)

ZCA135M050/ZCA135M075

Model type	Motor: Model number		Motor capacity	Reduction ratio	Thrust N{kgf} 50 Hz	Thrust N{kgf} 60 Hz	Speed mm/sec 50 Hz	Speed mm/sec 60 Hz	Allowable start-up frequency times/min. 50 Hz	Allowable start-up frequency times/min. 60 Hz	Chain direction of travel (see page 22)
ZCA135	1	B	0.1 kW	1/7.5	88 {9.0}	59 {6.0}	487	584	10	10	↓ Ⓑ
		C		1/10	137 {14.0}	98 {10.0}	365	438	10	10	
		D		1/12.5	186 {19.0}	147 {15.0}	292	351	10	10	
		E		1/15	235 {24.0}	186 {19.0}	243	292	10	10	
		F		1/20	333 {34.0}	274 {28.0}	183	219	10	10	
		G		1/25	431 {44.0}	363 {37.0}	146	175	10	10	
		H		1/30	539 {55.0}	431 {44.0}	122	146	10	10	
		J		1/40	755 {77.0}	617 {63.0}	91	110	9	10	
		K		1/50	941 {96.0}	804 {82.0}	73	88	7	8	
		L		1/60	☆1000 {☆102.0}	902 {92.0}	61	73	6	7	↑ Ⓐ
		M		1/80	☆1000 {☆102.0}	☆1000 {☆102.0}	46	55	5	6	
		N		1/100	☆1000 {☆102.0}	☆1000 {☆102.0}	37	44	4	5	
		P		1/120	☆1000 {☆102.0}	☆1000 {☆102.0}	31	37	3	4	
	2	A	0.2 kW	1/5	137 {14.0}	98 {10.0}	730	876	3	7	↓ Ⓑ
		B		1/7.5	235 {24.0}	186 {19.0}	487	584	8	10	
		C		1/10	343 {35.0}	274 {28.0}	365	438	10	10	
		D		1/12.5	451 {46.0}	363 {37.0}	292	351	10	10	
		E		1/15	529 {54.0}	431 {44.0}	243	292	10	10	
		F		1/20	755 {77.0}	617 {63.0}	183	219	10	10	
		G		1/25	960 {98.0}	794 {81.0}	146	175	10	10	
		H		1/30	☆1000 {☆102.0}	911 {93.0}	122	146	10	10	↑ Ⓐ
		J		1/40	☆1000 {☆102.0}	☆1000 {☆102.0}	91	110	10	10	
		K		1/50	☆1000 {☆102.0}	☆1000 {☆102.0}	73	88	8	10	
		L		1/60	☆1000 {☆102.0}	☆1000 {☆102.0}	61	73	7	8	
	4	A	0.4 kW	1/5	333 {34.0}	274 {28.0}	730	876	0.5	0.5	↓ Ⓑ
		B		1/7.5	539 {55.0}	431 {44.0}	487	584	1	2	
		C		1/10	755 {77.0}	617 {63.0}	365	438	3	5	
		D		1/12.5	921 {94.0}	794 {81.0}	292	351	8	10	
		E		1/15	921 {94.0}	941 {96.0}	243	292	10	10	
		F		1/20	951 {97.0}	☆1000 {☆102.0}	183	219	10	10	
		G		1/25	990 {101.0}	☆1000 {☆102.0}	146	175	10	10	
		H		1/30	☆1000 {☆102.0}	☆1000 {☆102.0}	122	146	10	10	

ZCA135M100

Model type	Motor: Model number		Motor capacity	Reduction ratio	Thrust N{kgf} 50 Hz	Thrust N{kgf} 60 Hz	Speed mm/sec 50 Hz	Speed mm/sec 60 Hz	Allowable start-up frequency times/min. 50 Hz	Allowable start-up frequency times/min. 60 Hz	Chain direction of travel (see page 22)
ZCA135	1	B	0.1 kW	1/7.5	88 {9.0}	59 {6.0}	487	584	10	10	↓ Ⓑ
		C		1/10	137 {14.0}	98 {10.0}	365	438	10	10	
		D		1/12.5	186 {19.0}	147 {15.0}	292	351	10	10	
		E		1/15	235 {24.0}	186 {19.0}	243	292	10	10	
		F		1/20	333 {34.0}	274 {28.0}	183	219	10	10	
		G		1/25	431 {44.0}	363 {37.0}	146	175	10	10	
		H		1/30	539 {55.0}	431 {44.0}	122	146	10	10	
		J		1/40	★600 {★61.2}	★600 {★61.2}	91	110	9	10	
		K		1/50	★600 {★61.2}	★600 {★61.2}	73	88	7	8	
		L		1/60	★600 {★61.2}	★600 {★61.2}	61	73	6	7	↑ Ⓐ
		M		1/80	★600 {★61.2}	★600 {★61.2}	46	55	5	6	
		N		1/100	★600 {★61.2}	★600 {★61.2}	37	44	4	5	
		P		1/120	★600 {★61.2}	★600 {★61.2}	31	37	3	4	
	2	A	0.2 kW	1/5	137 {14.0}	98 {10.0}	730	876	3	7	↓ Ⓑ
		B		1/7.5	235 {24.0}	186 {19.0}	487	584	8	10	
		C		1/10	343 {35.0}	274 {28.0}	365	438	10	10	
		D		1/12.5	451 {46.0}	363 {37.0}	292	351	10	10	
		E		1/15	529 {54.0}	431 {44.0}	243	292	10	10	
		F		1/20	★600 {★61.2}	★600 {★61.2}	183	219	10	10	
		G		1/25	★600 {★61.2}	★600 {★61.2}	146	175	10	10	
		H		1/30	★600 {★61.2}	★600 {★61.2}	122	146	10	10	↑ Ⓐ
		J		1/40	★600 {★61.2}	★600 {★61.2}	91	110	10	10	
		K		1/50	★600 {★61.2}	★600 {★61.2}	73	88	8	10	
		L		1/60	★600 {★61.2}	★600 {★61.2}	61	73	7	8	
	4	A	0.4 kW	1/5	333 {34.0}	274 {28.0}	730	876	0.5	0.5	↓ Ⓑ
		B		1/7.5	539 {55.0}	431 {44.0}	487	584	1	2	
		C		1/10	★600 {★61.2}	★600 {★61.2}	365	438	3	5	
		D		1/12.5	★600 {★61.2}	★600 {★61.2}	292	351	8	10	
		E		1/15	★600 {★61.2}	★600 {★61.2}	243	292	10	10	
		F		1/20	★600 {★61.2}	★600 {★61.2}	183	219	10	10	
		G		1/25	★600 {★61.2}	★600 {★61.2}	146	175	10	10	
		H		1/30	★600 {★61.2}	★600 {★61.2}	122	146	10	10	

- Models marked with " ☆ ," or " ★ " have torque limits. The motor output shaft torque exceeds the upper limits of ZCA thrust.
- ZCA135M050 and 075 models marked with " ☆ " are limited to a maximum thrust of 1000 N{102.0 kgf} or less.
- ZCA135M100 models marked with "★" are limited to a maximum thrust of 600 N {61.2 kgf} or less.
  However, models with bellows are limited to a maximum thrust of 431 N {44.0 kgf} or less.

External Dimensional Diagram ZCA145N Main Unit

■ ZCA145N100 150 200 (Basic model)

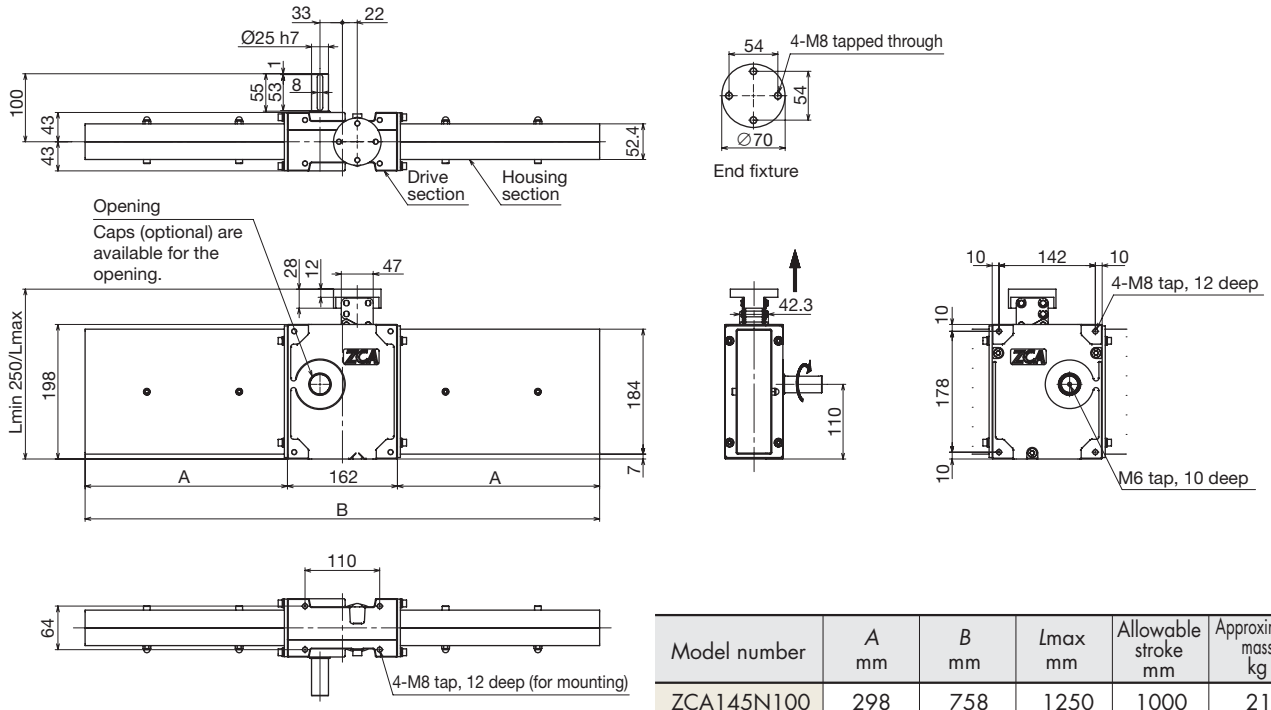

Model number	A mm	B mm	Lmax mm	Allowable stroke mm	Approximate mass kg
ZCA145N100	298	758	1250	1000	21
ZCA145N150	423	1008	1750	1500	25
ZCA145N200	548	1258	2250	2000	30

External Dimensional Diagram ZCA145N Optional Parts

■ ZCA145N100 150 200-□S (Bottom mounting base)

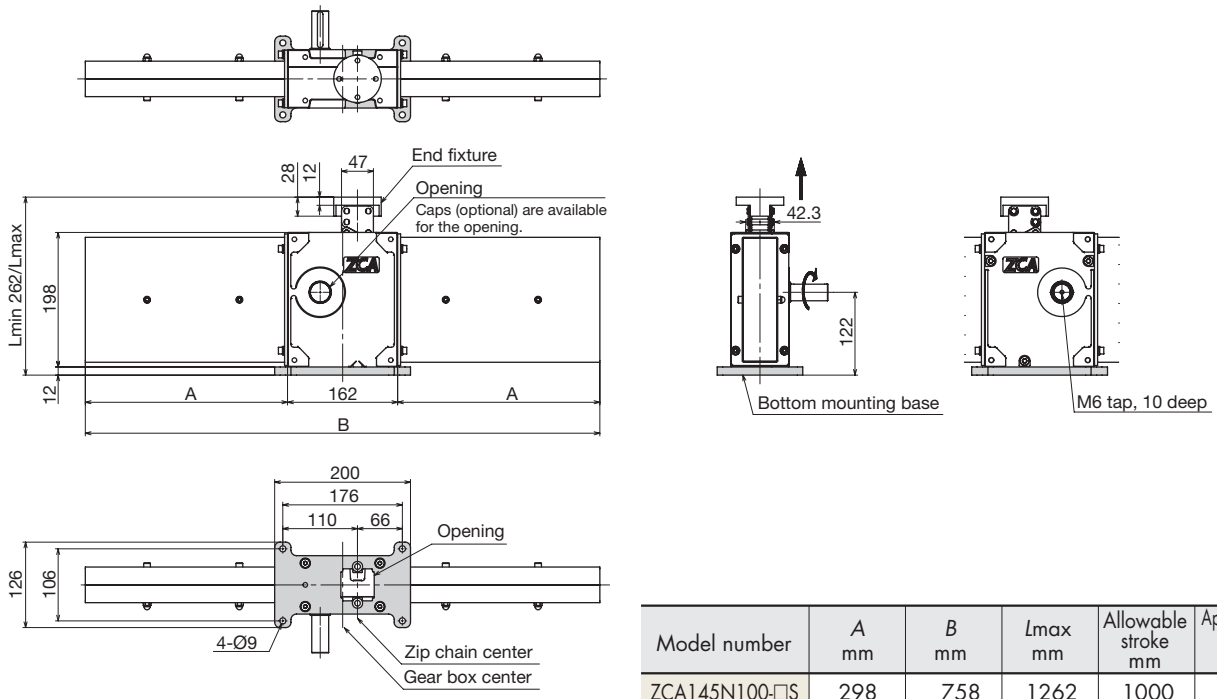

Model number	A mm	B mm	Lmax mm	Allowable stroke mm	Approximate mass kg
ZCA145N100-□S	298	758	1262	1000	22
ZCA145N150-□S	423	1008	1762	1500	27
ZCA145N200-□S	548	1258	2262	2000	31

ZCA145N100 150 200-□B (Mounting Base)

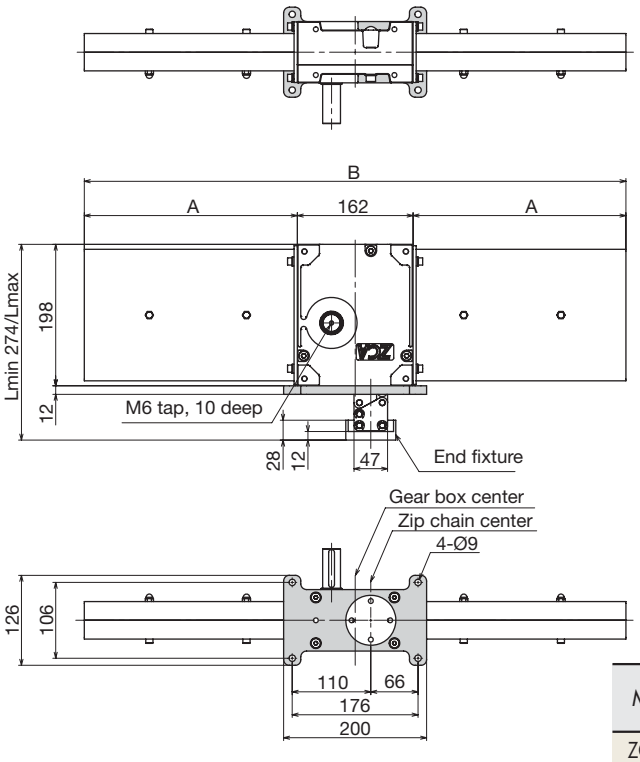

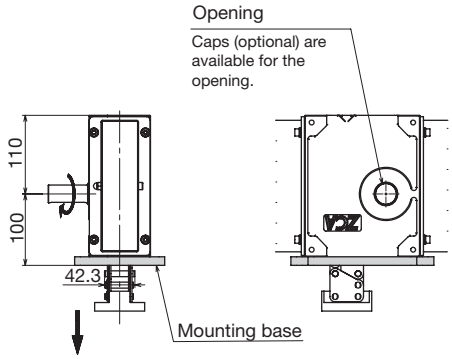

Model number	A mm	B mm	Lmax mm	Allowable stroke mm	Approximate mass kg
ZCA145N100-□B	298	758	1274	1000	22
ZCA145N150-□B	423	1008	1774	1500	27
ZCA145N200-□B	548	1258	2274	2000	31

ZCA145N100 150 200-□C (Cap)

Caps are available for the opening.
The drive section side opposite the shaft is open unless using dual shafts.

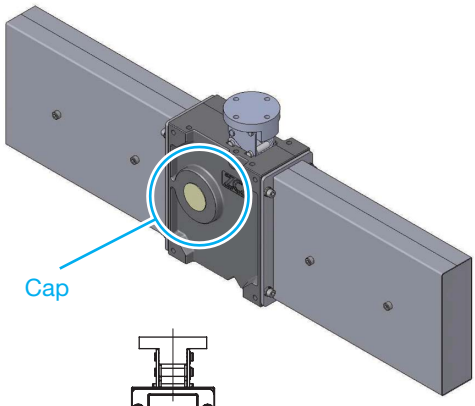

Dimensions with caps

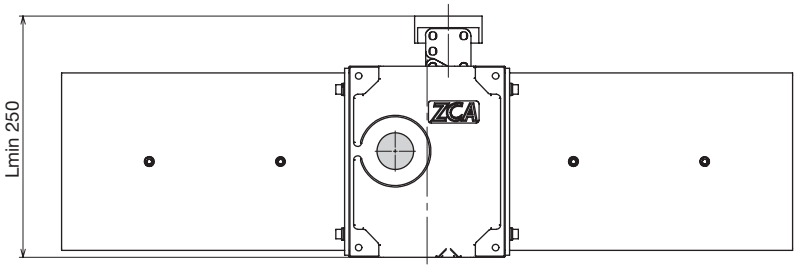

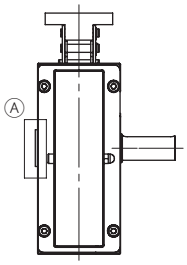

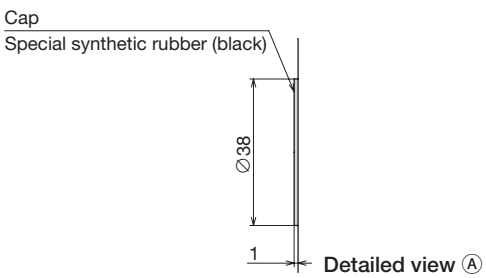

■ ZCA145N100 150 200-□R (Input shaft on the opposite side)

The mounting taps on the drive section base are the same as with the basic model.

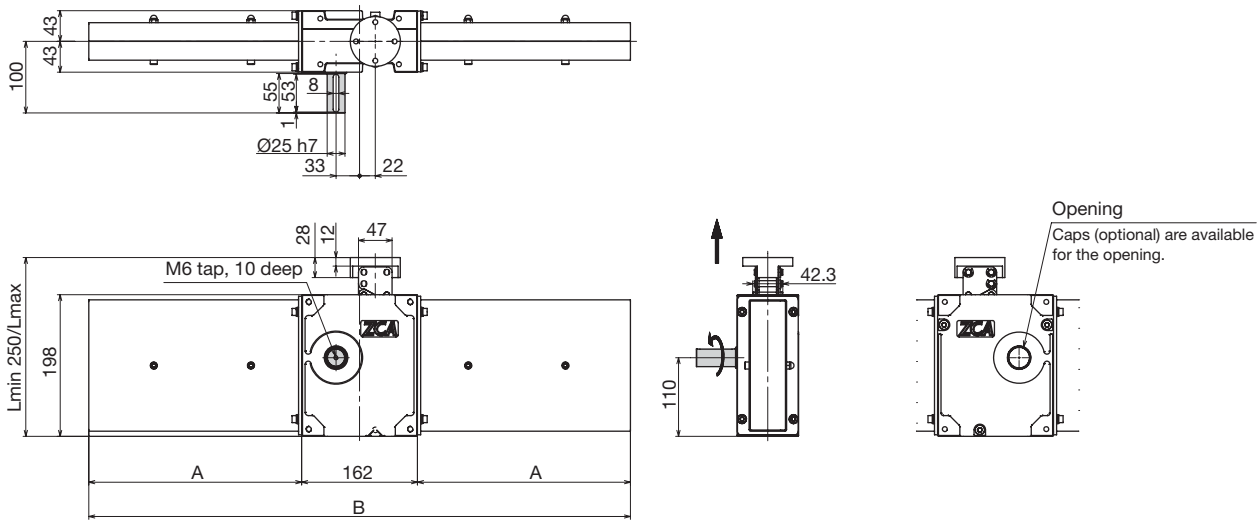

Model number	A mm	B mm	Lmax mm	Allowable stroke mm	Approximate mass kg
ZCA145N100-□R	298	758	1250	1000	21
ZCA145N150-□R	423	1008	1750	1500	25
ZCA145N200-□R	548	1258	2250	2000	30

■ ZCA145N100 150 200-□T (Dual Shafts)

The mounting taps on the drive section base are the same as with the basic model.

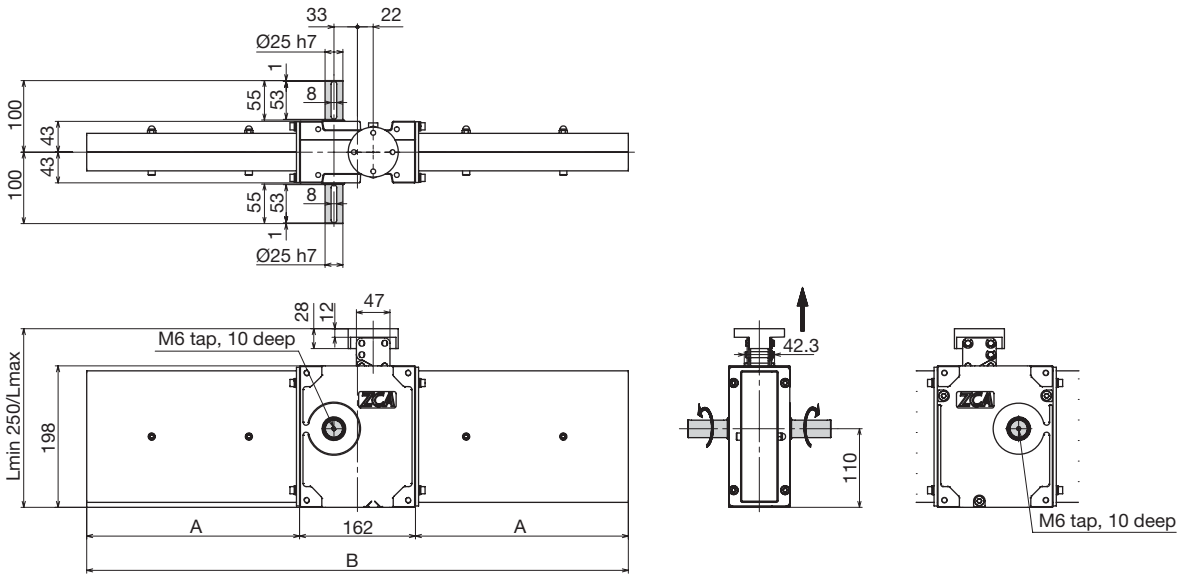

Model number	A mm	B mm	Lmax mm	Allowable stroke mm	Approximate mass kg
ZCA145N100-□T	298	758	1250	1000	21
ZCA145N150-□T	423	1008	1750	1500	25
ZCA145N200-□T	548	1258	2250	2000	30

Pay special attention to the input torque when the ZCA is connected in parallel by means of a shaft (see page 30).

ZCA145N100 150 200-□J (Bellows)

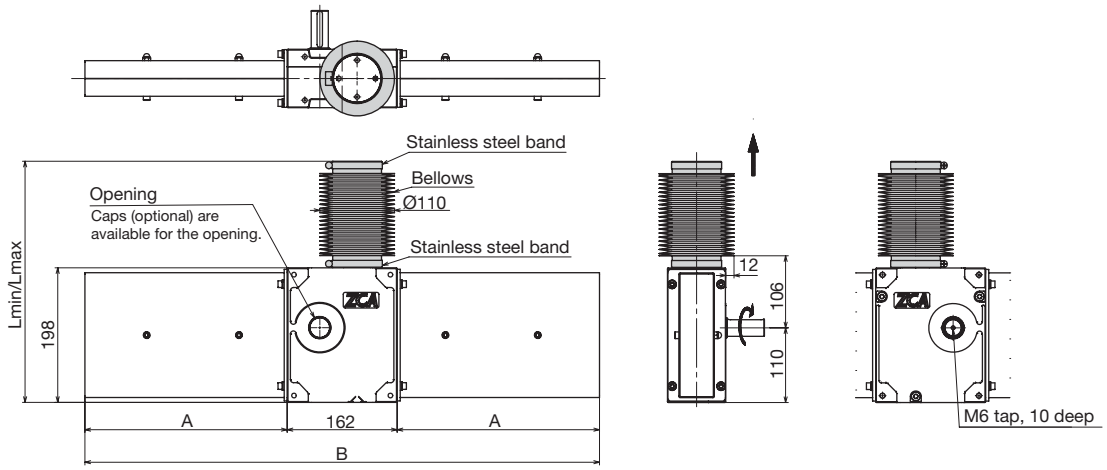

External dimensional diagram for bellows for lifting installations.
Bellows can only be installed later with lifting/hanging installations.
The allowable stroke will change if bellows are attached later.
Bellows for hanging installations are paired with a mounting base.
Contact a Tsubaki representative regarding external dimensional drawings.

The mounting taps on the drive section base are the same as with the basic model.

Bellows	Material	Thermoformed polyurethane
	Color	Black

Bellows using different material are made-to-order.
Bellows for horizontal installations (Y) are manufactured separately.
Contact a Tsubaki representative for more information.

Model number	A mm	B mm	Lmin mm	Lmax mm	Allowable stroke mm	Basic capacity N {kgf}	Approximate mass kg
ZCA145N100-□J	298	758	355	1355	1000	2000 {204.0}	22
ZCA145N150-□J	423	1008	410	1910	1500	2000 {204.0}	27
ZCA145N200-□J	548	1258	465	2465	2000	900 {91.8} *	32

*Limit basic capacity to 900 N {91.8 kgf} or less for 2000-mm stroke models with bellows.

ZCA145N100 150 200-□F (Grease Plate)

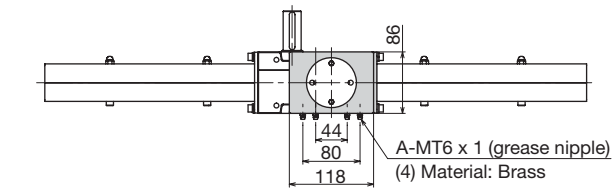

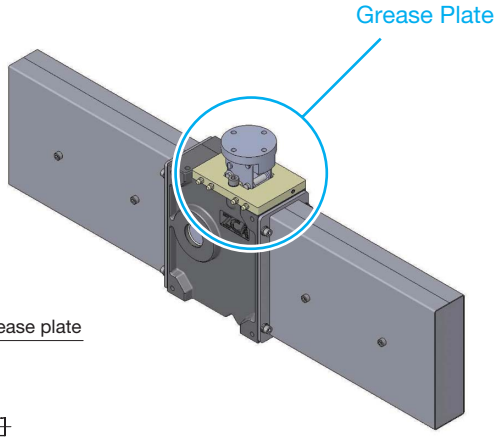

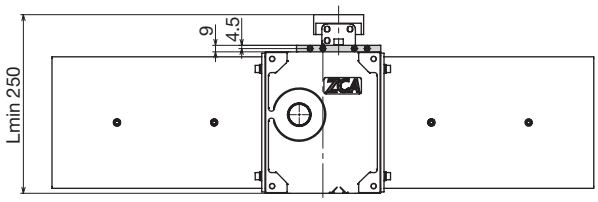

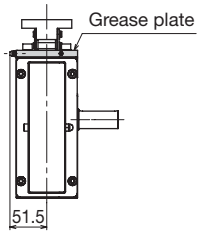

The grease plate cannot be retrofitted.
Can be combined with bellows and mounting bases.
(Contact a Tsubaki representative when using together with a mounting base.)
Grease plates come with grease nipples.
Grease plates that can be attached on either side are made-to-order.
Grease plates aid in chain lubrication.
Grease the plates using all four grease nipples.
Refer to the operator's manual for greasing methods.
Has the same allowable stroke as the ZCA145N (basic model).

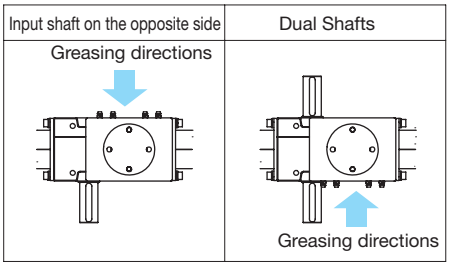

When attaching grease plates to input shafts on the opposite side or dual shafts, use the grease nipples as shown above. Grease in the direction of the arrows.

Examples of Optional Part Combinations

ZCA125N050-UJF

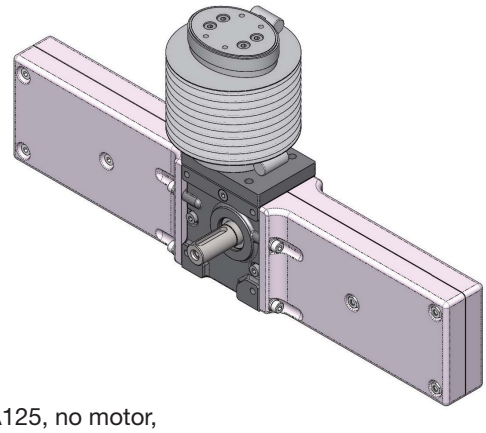

ZCA125, no motor,
allowable stroke 500 mm, lifting installation, bellows, grease plate
The combination of the above optional parts will give this unit a different *L*min from the ZCA125N050-□J.

ZCA135N075-DBT

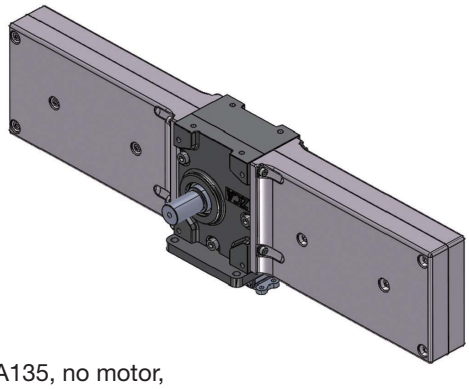

ZCA135, no motor,
allowable stroke 750 mm, hanging installation, mounting base, dual shafts
The shape of the housing unit for a 750 mm stroke is shown above.

ZCA135M100-1HUJC

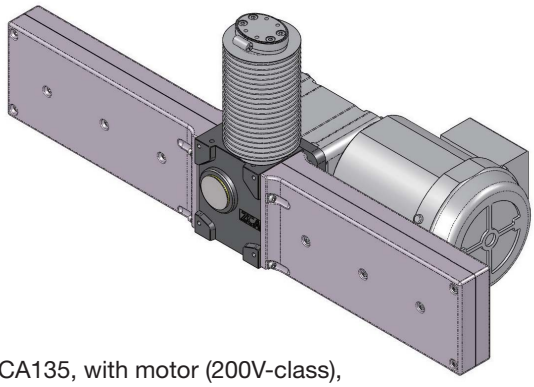

ZCA135, with motor (200V-class),
allowable stroke 1000 mm,
Motor capacity 0.1 kW, reduction ratio 1/30,
lifting installation, bellows, cap
The shape of the housing unit for a 1000 mm stroke is shown above.

ZCA135M050-2EDB

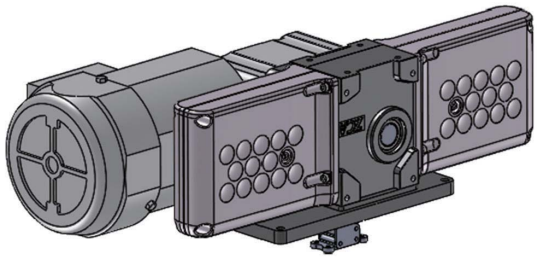

ZCA135, with motor (200V-class),
allowable stroke 500 mm,
Motor capacity 0.2 kW, reduction ratio 1/15,
hanging installation, mounting base
(shape differs from ZCA units without motors)

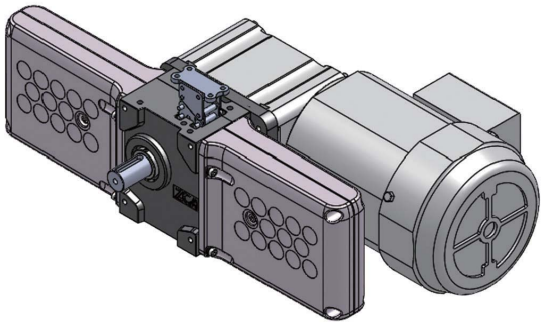

Motor installation direction when motors are combined with dual shafts

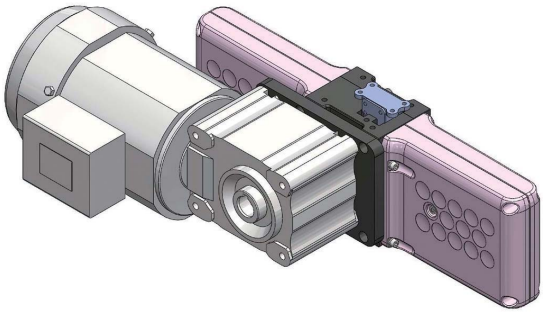

Motor installation direction when motors are combined with input shafts on the opposite side.

The motor will be installed in the direction shown in the diagrams when motors are combined with dual shafts or input shafts on the opposite side. Contact a Tsubaki representative for motor installation directions that are not shown in the above figures. (The dimensions of the motor fan cover base and drive section base will differ depending on the installation direction.)

Selection Graph

The chart to the right presents the relationship between stroke and basic capacity.
Select a suitable model by confirming the required thrust per ZCA and stroke in the chart. If more detailed examination is necessary, check if your selection suits your application using the calculations shown below.

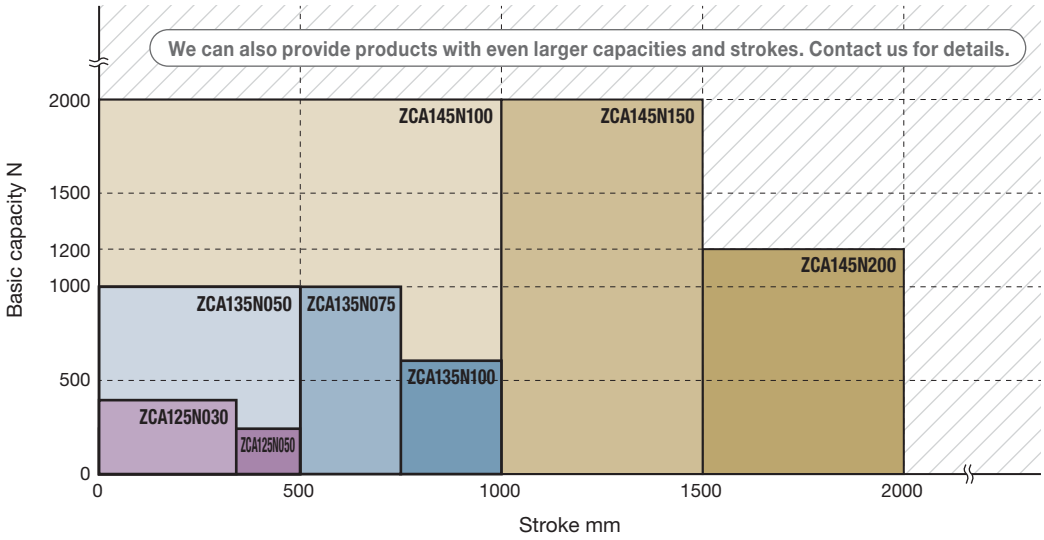

Selection Procedure

(1) Machine used with the unit ····· Machine structure, number of the ZCAs to be used, operating environment, etc.
(2) Load ····· Load characteristics, mass of load or workpiece, drive source, drive system, etc.
(3) Installation type ····· Mounting direction (lifting, horizontal, hanging), linear guide system
(4) Operating speed ····· Speed required for ZCA operation
(5) Stroke ····· Actual stroke to be used

1. Calculate the design load *Fs*

Consider the characteristics of the load, refer to the service factor (Table 1), and then calculate the design load (Fs).
Design load *Fs* N{kgf} =
Required thrust *P* N{kgf}) x Service factor *Sf*

Table 1 Service factor *Sf*

Load characteristics	Application example	Service factor
Smooth motion with no impact Load inertia: low	Switching a conveyor	1.0 to 1.3
Motion with light impact Load inertia: medium	Transfer equipment Raising and lowering lifters	1.3 to 1.5

2. Calculate the thrust required per unit Fs_1

Obtain the thrust required per unit (Fs_1) from the design load (*Fs*).
If multiple units are operated simultaneously, calculate Fs_1 by referring to the multi-factor (Table 2).
Thrust per ZCA Fs_1 N{kgf} = Corrected load *Fs* N{kgf} ÷ (No. of units simultaneously operated x Multi-factor *Fg*)

Table 2 Multi-factor

No. of units operated simultaneously	1	2	4
Load sharing factor *Fg*	1.0	0.83	0.69

3. Select a model either with a motor or without a motor

4. Provisionally select model number

Consult the model list to confirm that the thrust per unit Fs_1 is below the basic capacity of ZCA.
When deciding the stroke, ensure some allowance with the actual stroke to be used.
[When “without motor” is selected]
Consult the model list and provisionally select a model according to the thrust per unit and the stroke. Proceed to item 5 and subsequent items.
[When “with motor” is selected]
Consult the model list and provisionally select a model that satisfies the requirements for the thrust per unit, the operating speed of chain, and the stroke. Proceed to item 9 and subsequent items.

5. Maximum speed

Confirm that the operating speed of ZCA does not exceed the predetermined maximum speed.

6. Check required input rotation speed

Calculate the required input rotation speed from the operating speed.
N=*V*x60/*K* *N*: Input rotation speed r/min *V*: Operating speed mm/sec *K*: Zip Chain travel distance per input shaft rotation mm (Table 3)

7. Check required input torque

Calculate the required input torque.

$$T = \frac{Fs_1 \times Dp}{2 \times 1000 \times \eta} + To$$

T :Required input torque N·m {kgf·m}
Dp :Sprocket pitch circle diameter mm (Table 3)
To :Mean unloaded operating torque N·m {kgf·m} (Table 3)
Fs_1 :Required thrust per unit N {kgf}
η :ZCA overall efficiency (Table 3)

Table 3 Performance sheet

Model no.	ZCA125	ZCA135	ZCA145
Overall efficiency η	90%	90%	90%
*Mean unloaded operating torque N·m{kgf·m}	0.62 {0.063}	1.63 {0.17}	5.85 {0.6}
Zip Chain travel distance per input shaft rotation *K* mm	95.3	142.9	240
Sprocket pitch circle diameter *Dp* mm	ϕ30.92	ϕ46.48	ϕ78.0

*Mean value of torque required to continuously rotate input shaft while the unit is unloaded.
Torque varies pitch by pitch each time the chains engage with each other.

8. Consider allowable overhang load

If the input shaft is driven by a chain, gear, tooth belt, V-belt, etc., make sure that the overhang load is lower than the allowable value shown below.

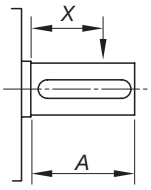

Table 4 Transmission element factor (*f*)

Chain	Gear Tooth belt	V-belt
1.0	1.25	1.5

Table 5 Load position factor (*Lf*)

X/A	0.25	0.5	0.75	1.0
Lf	0.9	1.0	1.15	1.25

O.H.L.: Overhang load N {kgf}
f: Transmission element factor (Table 4)
Lf: Load position factor (Table 5)
T: Required input torque N·m {kgf·m}
D: Pitch circle diameter of sprocket, gear, pulley, etc. m

$$\text{Allowable O.H.L.} \geq \frac{2 \times T \times f \times Lf}{D}$$

Table 6 Allowable overhung load

Model number	ZCA125N□ (Basic type)	ZCA135N□ (Basic type)	ZCA145N□ (Basic type)
Allowable overhang load N {kgf}	638 {65.0}	946 {96.4}	2065 {210.5}

9. Select optional accessories

Select optional accessories according to the operating conditions.

• With mounting base • Cap • Input shaft on opposite side • Dual shafts • With bellows • Grease plates

10. Decide the model no.

11. Calculate the required input capacity (for a model without motor)

Required input capacity *P* kW = *T* x *N*/9550

Note: When the mean unloaded operating torque makes up 25% or more of the required input torque, the torque fluctuation caused by engaging chains becomes larger. For smooth operation of the unit, select a model by increasing the mean unloaded operating torque (Table 3) by half.

Be careful when selecting required input torque

When ZCA units are arranged in parallel as shown below, confirm that the allowable input shaft torque is less than the required torque of the motor.

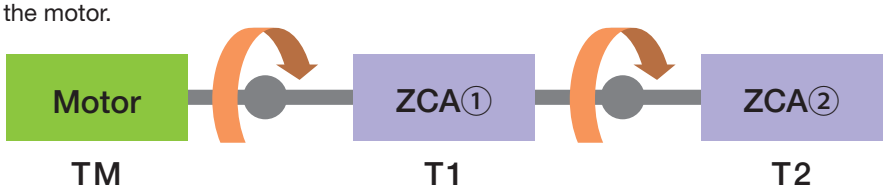

Two units' worth of required input torque is being transmitted to the input shaft on ZCA (①) on the motor side.
Confirm that the two units' worth of torque falls below the allowable input shaft torque.

Required input torque for ZCA ① only: T1
Required input torque for ZCA ② only: T2
Motor required torque TM = T1 + T2 < Allowable input shaft torque

Selection Example

(1) Equipment..... Lifter using two ZCA units, indoor use (factory, ambient temperatures, no dust)
(2) Required thrust... Light impact, 1200 N{122 kgf}/2 units, gear motor with brake installed separately and connected by couplings
(3) Installation ..... Four guide poles (lifting installation)
(4) Operating speed. 250 mm/sec (rated speed, acceleration not calculated)
(5) Stroke..... 450 mm
(6) Power..... 200 V/60 Hz

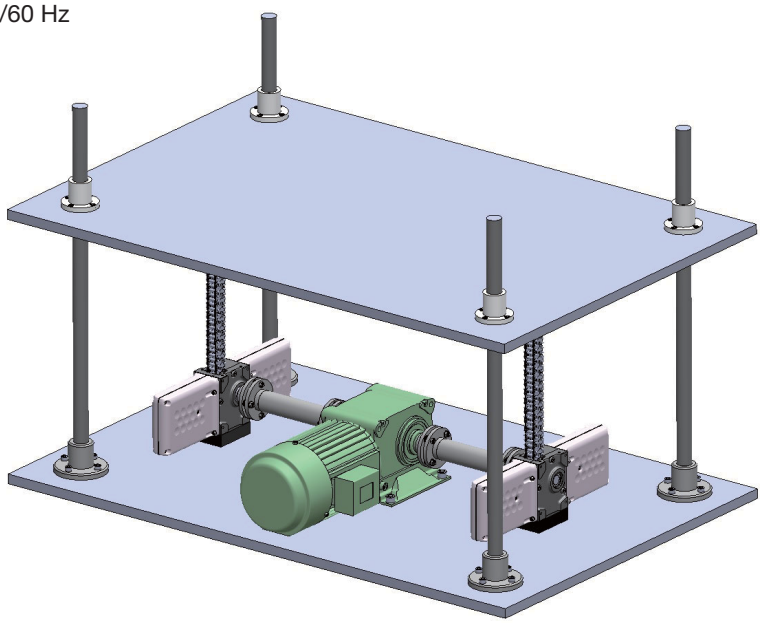

SI Units

• ZCA

1. Corrected load Fs (with service factor Sf = 1.3) is:
   Fs = 1200 × 1.3 = 1560 N
2. There are two units operating (Fg = 0.83),
   so thrust Fs_1 per unit is:
   Fs_1 = 1560 ÷ (2 × 0.83) = 939.8 N
3. A gear motor with brake is installed separately, so there is no motor on the ZCA.
4. Based on thrust and stroke per unit, we tentatively select ZCA135N050
   938.9 N < 1000 N (basic capacity of ZCA135N050)
5. The operating speed is 250 mm/sec < 1000 mm/sec, so the speed falls below the allowable speed.
6. Required input rpm is
   N = 250 × 60 ÷ 142.9 = 105 r/min
7. Required input torque per ZCA unit is
   T = 939.8 × 46.48 ÷ (2 × 1000 × 0.9) + 1.63
   = 25.9 N·m < 34.7 N·m (allowable input shaft torque)
   Required input capacity is
   P = 25.9 × 2 × 105 ÷ 9550 = 0.57 kW
8. The units are connected by couplings, so there is no need to confirm overhang load.
9. Selecting options
   Due to the layout, one ZCA has the input shaft on the opposite side (option).
10. From the above results, ZCA135N050 and ZCA135N050-□R are selected.

{Gravimetric Units}

• ZCA

1. Corrected load Fs (with service factor Sf = 1.3) is:
   Fs = 122 × 1.3 = 158.6 kgf
2. There are two units operating (Fg = 0.83),
   so thrust Fs_1 per unit is:
   Fs_1 = 158.6 ÷ (2 × 0.83) = 95.6 kgf
3. A gear motor with brake is installed separately, so there is no motor on the ZCA.
4. Based on thrust and stroke per unit, we tentatively select ZCA135N050
   95.6 kgf < 102 kgf (basic capacity of ZCA135N050)
5. The operating speed is 250 mm/sec < 1000 mm/sec, so the speed falls below the allowable speed.
6. Required input rpm is
   N = 250 × 60 ÷ 142.9 = 105 r/min
7. Required input torque per ZCA unit is
   T = 95.6 × 46.48 ÷ (2 × 1000 × 0.9) + 0.17
   = 2.64 kgf·m < 3.53 kgf·m (allowable input shaft torque)
   Required input capacity is
   P = 2.64 × 2 × 105 ÷ 974 = 0.57 kW
8. The units are connected by couplings, so there is no need to confirm overhang load.
9. Selecting options
   Due to the layout, one ZCA has the input shaft on the opposite side (option).
10. From the above results, ZCA135N050 and ZCA135N050-□R are selected.

SI Units

- **Motor** (60 Hz)

1. Reduction ratio
   From the hypoid motor catalog's characteristic table, we find that an output RPM close to 60 Hz and 105 rpm would be 120 rpm with a reduction ratio of 1/15.
2. Motor capacity selection
   P = 51.8 x 105 ÷ 9550 = 0.57
   (select a motor with more than 0.6 kW capacity)
   From the above, we select a 0.75 kW hypoid motor with legs and brake, HMTR075-38L15TB.
   For more information, refer to information on the Tsubaki gear motors.

- **Coupling**

1. Coupling rpm is 105 rpm
2. Torque on coupling: 25.9 N·m
3. 25.9 x 2.5 (coupling service factor) = 64.8 N·m
   Since 64.8 N·m < 98 N·m
   (NEF10W-J allowable torque),
   ECHT-FLEX® Coupling NEF10W-J would be ideal.

{Gravimetric Units}

- **Motor** (60 Hz)

1. Reduction ratio
   From the hypoid motor catalog's characteristic table, we find that an output RPM close to 60 Hz and 105 rpm would be 120 rpm with a reduction ratio of 1/15.
2. Motor capacity selection
   P = 5.28 x 105 ÷ 974 = 0.57
   (select a motor with more than 0.6 kW capacity)
   From the above, we select a 0.75 kW hypoid motor with legs and brake, HMTR075-38L15TB.
   For more information, refer to information on the Tsubaki gear motors.

- **Coupling**

1. Coupling rpm is 105 rpm
2. Torque on coupling: 2.64 kgf·m
3. 2.64 x 2.5 (coupling service factor) = 6.6 kgf·m
   Since 6.6 kgf·m < 10 kgf·m
   (NEF10W-J allowable torque),
   ECHT-FLEX® Coupling NEF10W-J would be ideal.

When position control is needed, use a motor with an encoder or a servo motor.
(Contact a Tsubaki representative regarding using a motor with an encoder.)
When using a servo motor, Tsubaki can install a Tsubaki gear reducer for servo motors. Please contact to Tsubaki.
The selection example above is just an example. Refer to the appropriate catalog when selecting the coupling, miter gear box, and motor.

Motors

Gear motor

Hypoid motor

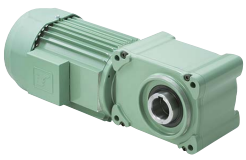

Gear Boxes

Miter gear box

Couplings

ECHT-FLEX®

Jaw-Flex

Installation Precautions

1. Since the ZCA uses grease for lubrication, it may spatter. Take all appropriate precautions to avoid any adverse effect on the usage environment. In particular, when using the ZCA in a hanging position (vertically hanging installation), grease may drip.
2. The ZCA can be installed in the vertical lifting or hanging directions or horizontally. However, when it is installed horizontally or in a hanging position, do not allow the weight of the unit and the weight of conveyed items to be placed on the mounting bolts. If the unit operates in such a condition, it may result in damage to the unit. Install the unit in a manner that prevents the mounting bolts from receiving any the load.(Figure 1)

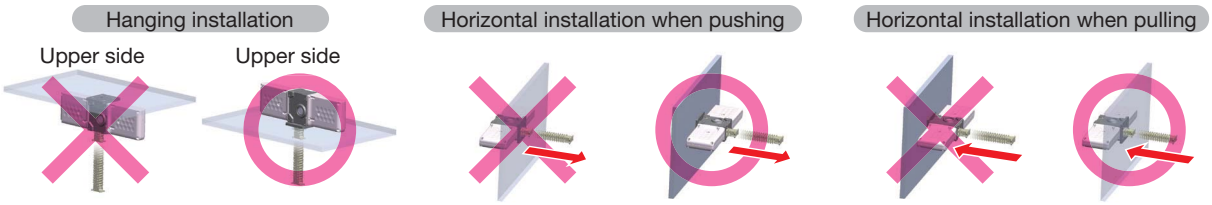

Figure 1 Correct/incorrect installation direction

3. When installing a model without a motor, prepare a pedestal to install a motor, speed reducer, and this unit on. The pedestal should be solid and rigid enough to sufficiently secure the alignment accuracy established during the installation even if the maximum load is applied. Install a separate mechanism to align the heights of the motor output shaft and ZCA input shaft centers. If the shaft center heights are misaligned, the force of the rotation bending will act on the motor output shaft and ZCA input shaft and lead to shaft damage.
4. If the input shaft is driven by a chain, belt, or the like, make sure that the overhang load acting on the shaft is kept within the allowable overhang load. (For details, see Selection Procedure on pages 29 and 30.)
5. Install the ZCA securely using four mounting holes tapped on the unit and the end bracket respectively. (The mounting bolts are not supplied with the ZCA.) Refer to Table 1 and use suitably-sized mounting bolts that have a rigidity of class 10.9 or higher (JIS B1051). Take into account the strength of fixing parts to decide appropriate screw-in depths.

Table 1 Mounting bolt size

Model no.	Drive section (bottom)	Drive section (side)	End bracket
ZCA 125	M5	M5	M4
ZCA 135	M6	M6	M5
ZCA 145	M8	M8	M8

Apply screw lock when installing.

6. Do not perform contact stopping at the stroke end under any circumstances. Doing so may cause serious damage to the inside of main body.
7. Install the unit so that the load put on the main body will act on the shaft placed in the same travelling direction as that of the Zip Chain. If the direction of action or position is not correct, the Zip Chain may receive bending loads or lateral loads and may be damaged. (Figure 2)
   Be sure to mount a linear guide in the direction of travel so that the Zip Chain is not subjected to direct lateral loads or bending, twisting moments.
8. A Zip Chain consists of two lengths of chain whose links engage each other to form a column. Some twisting or warpage may occur in this column.
9. Include leeway with the stroke used. If the actual stroke exceeds the determined range, it may damage the stopper, cause the chain to come off, or cause the end bracket to collide with the drive section, eventually damaging the unit.

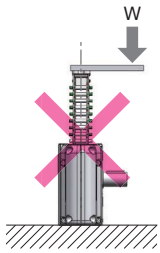

Figure 2

10. Set the limit switch that is installed to control the stroke with inertia in mind.
11. Check the rotational direction of the input shaft and the traveling direction of the Zip Chain beforehand. (Refer to the outline dimensional drawings.) An incorrect rotational direction may damage the unit.
    When the unit is equipped with a motor, please note that the traveling direction of the chain in relation to the electrical wiring varies depending on speed.
12. Ensure that foreign substances such as dust and hot chips do not attach to or enter the Zip Chain or the opening of the drive section. These substances will accelerate wear in the unit and may lead to serious trouble such as chain fracture or damage to moving parts.
13. If the ZCA is installed using the bottom surface of the drive section, then the keyway of the input shaft will face almost perfectly upward at the stroke lower limit (see Figure 3). However, if synchronized a small amount of displacement will occur due to individual differences in backlash and so on. To prevent this, separately install a mechanism that adjusts phase.
    Misaligned phase will result in increased load per ZCA unit, leading to chain buckling, shaft damage, and other problems. When aligning phase, use a Tsubaki Power-Lock® or similar item and align it with the height of the fixture with the Zip Chain at its lowest position.

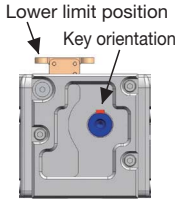

Figure 3

14. When a ZCA is used in equipment hung from above, install a safeguard and safety fence as a precautionary measure against chain fracture, and refrain from entering the area beneath the suspended objects.
    We will be unable to manufacture or sell ZCA units in situations where there is a risk of injury to people.
15. Using bellows intended for vertical lifting or handing installation with horizontal installations will shorten the service life of the bellows. If bellows are needed in horizontal installations, be sure to use bellows that incorporate special parts designed for this purpose.
16. Condensation, humidity, and so on may cause the grease to deteriorate prematurely and leak out.
17. Do not modify the Zip Chain Actuator.

Operating Precautions

1. Confirm that all the loads acting on the ZCA, regardless of whether they are static or dynamic, do not exceed the basic capacity, available input shaft torque, and allowable overhang load. (For details, refer to Selection Procedure on pages 29 and 30.)
2. Install a shock absorber if necessary to protect the unit from direct impacts.
3. A gear motor, servo motor, or the like can be used as the drive source. Since this unit has extremely high efficiency, the motor may reverse depending on the applied load. Be sure to use a brake or brake motor to prevent reversing caused by inertia or load. Use a highly-responsive brake with a braking torque over 150%.
4. When select input motor, it should be more than 4 times of the mean unladed operation torque, otherwise chain engagement makes fluctuated operation.
5. Though the mean unloaded operating torque may become high for some time after the first use of the unit, this is part of the bedding-in process. Use the unit as it is. Meanwhile, the torque will gradually even out.
6. On a model without motor, the duty factor (%ED) [Operating time/(Operating time + Rest time)] conforms to the capabilities of the drive source since it is dependent on the motor or equipment providing input.
7. When using in equipment that will transport people, install a protection device on the equipment side to ensure safety. Operating the equipment recklessly may result in accidents resulting in injury or death, or damage to the equipment.
8. When using in lifting applications, install a safety device on the equipment side to prevent sudden drops. Sudden equipment drops may result in accidents resulting in injury or death, or damage to the equipment.
9. When using in hanging applications, always install a safety device in case the chain breaks. In addition to installing a safety fence, never pass underneath suspended items.

Maintenance Precautions

1. The Zip Chain and the drive section have been lubricated with grease in advance, and the unit is delivered ready to use. For maintenance, use the recommended grease shown in Table 2. The lubrication cycle in normal use is generally 1 year. However, this will differ according to frequency and conditions of use. Refer to Table 3 for a guide.
2. When lubricating the Zip Chain, first remove the old grease with a brush or the like, and then evenly apply grease directly to the entire Zip Chain also with a brush or the like.

Table 2 Recommended grease

Section to apply	Manufacturer	Grease name
Zip chain and drive section	Showa Shell Sekiyu K. K.	*Shell Alvania EP Grease 2
	Idemitsu Kosan Co., Ltd.	Daphne Eponex SR No.2
	EMG Lubricants G.K.	Mobilux EP 2
	JXTG Nippon Oil & Energy Corporation	EPNOC Ap(N)2

* This grease is applied before shipment.
★ The product names above are trademarks or registered trademarks of their respective companies.

Table 3 Lubrication cycle reference

Frequency of use per day	Lubrication cycle		
Model no.	**ZCA 125**	**ZCA 135**	**ZCA 145**
2000 to 2700	6 months	4 months	1.5 months
1000 to 2000	8 months	5 months	2 months
1 to 1000	12 months	12 months	3.5 months

As a guideline for greasing, every 500,000 cycles for ZCA125, 350,000 cycles for ZCA135, and 100,000 cycles for ZCA145. Apply the grease according to either the lubrication cycle or the frequency of use, whichever comes first.

Q & A

Q1 Is lateral load allowed?

A **No lateral load is allowed.**
Make sure to install a linear guide in the direction of travel.

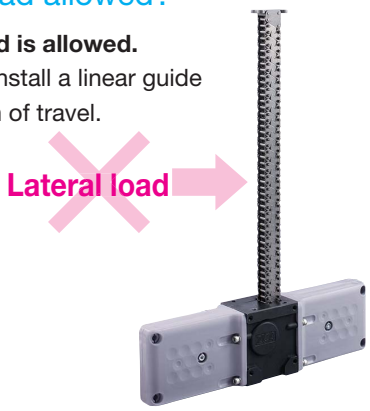

Q2 How should I perform maintenance?

A For the standard lubrication cycle under normal application, refer to "Table 3 Lubrication cycle reference" in page 34 of this catalog.
The lubrication cycle may vary depending on the frequency and condition of usage.
For details, refer to the instruction manual.

Q3 How should I grease the product?

A Grease the Zip Chain by directly applying grease uniformly over the entire Zip Chain using a brush, after removing old grease with the brush, etc.
For details of the amount and method of greasing, refer to the instruction manual.

Q4 What is the service life?

A Reference timing of replacement as a service life limitation is 4000 km of travel distance, or for ZCA125: 6 million cycles, for ZCA135: 4 million cycles, and for ZCA145: 2 million cycles; whichever is reached first.

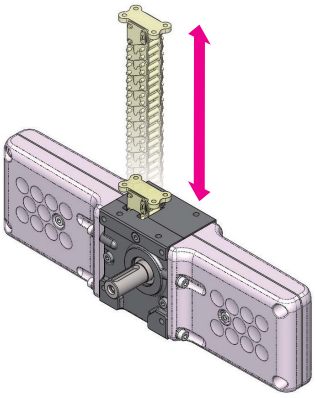

- **For ZCA125,**
  Approximately 6 million cycles or distance of 4000 km
- **For ZCA135,**
  Approximately 4 million cycles or distance of 4000 km
- **For ZCA145,**
  Approximately 2 million cycles or distance of 4000 km

whichever is reached first

Q5 Can I replace the chain only?

A **Replacing the chain only is not possible.**
A ZCA that has reached its service life needs to be replaced, including the entire main body.
Reaching the service life also means reaching that of the bearings in use. Replace the bearings along with the ZCA.

**Replacing the chain only is not possible.
It needs to be replaced along with the entire main body.**

Q6 How much does the Zip Chain deflect when installed in the horizontal direction?

A The chain may deflect just by its own weight when it is pulled out from the main body for its full stroke.
The amount of deflection increases as the number of operation cycles increases.
Make sure to install a linear guide when installing in the horizontal direction.

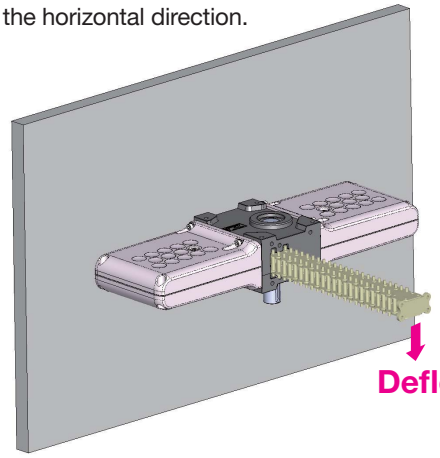

Q7 Is a model with a servo motor available?

A **No model with a servo motor is available.** For ZCA135, direct connection of a motor is available by using the gear reducer for servo motors.
Contact a Tsubaki representative when using ZCA125.
A servo motor needs to be installed by the customer.
* Gear reducer for servo motors is not available for ZCA145.

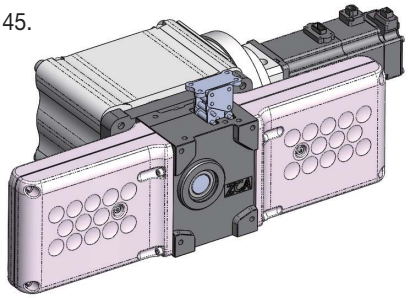

Q8 Can the bellows be mounted in horizontal installation?

A The bellows will break early due to interference with the chains in horizontal/vertical installation. **Dedicated bellows with special parts is required.** Contact a Tsubaki representative for more information.

Q9 Is it possible to add bellows later?

A **Adding it later is possible.**
However, bellows for horizontal installation (Y) can not be added later, so specify it when ordering.
Allowable stroke may change when adding bellows later.
Contact a Tsubaki representative for more information.

Adding it later is possible. For details, check with us when ordering.

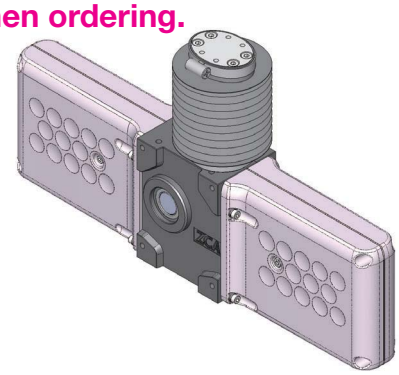

Q10 Does the stroke range have any margin?

A Make sure to **use the product within the lower and upper limit of the stroke range** described in the catalog, without relying on the margin.

Use within the lower and upper limit of the stroke range.

Q11 Is there any caution for hanging installation?

A **A guide and a safeguard must be installed just in case the chain breaks.** Furthermore, install a safety fence, and never enter the area underneath the suspended object.

Q12 Can the chain fall out?

A **The structure prevents falling out** with a stopper at the end of the chain. However, this is for preventing the chain falling out during emergencies. Never use this structure to stop falling out for restricting stroke in normal applications. It is dangerous due to possible breakage of the stopper and the chain falling out.

Structure prevents falling out with a stopper.

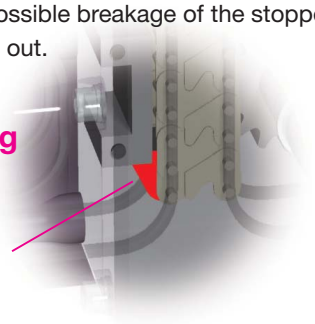

Q13 Is outdoor use possible?

A **Outdoor specifications are not available** for this device.

Not for outdoor use.

Q14 Is basic capacity the same as the load that can be held?

A For ZCA, **the basic capacity is same as the load that can be held during stop.**

Q15 Can I use the end of the chain as a stopper?

A **Never use the stroke end of the chain as a stopper.** Stopping at the stroke end may cause serious damage on the parts inside the main body.

Q16 Is it possible to synchronize two ZCAs by matching the positions of keyways of input shafts?

A Difference between units due to backlash may cause small amount of misalignment of the positions of input shaft keyways at the lower stroke limit. **Separately install a mechanism to adjust phases.**

ZIP CHAIN ACTUATOR® Inquiry Sheet

Company:	Country:
Contact name:	Phone:
Address:	Fax:
Postal code:	E-mail:

First We check for the following applications to ensure safety is being observed.
Make sure to place an "✓" symbol in the checkbox for applicable items.

☐ Nuclear power ☐ Amusement machine ☐ Suspension applications ☐ Personnel transport ☐ Vehicle ☐ Food industry

Usage Conditions

① **Equipment** :

② **Applications** :

③ **Number of interlinked ZCA units** :

④ **ZCA mounting direction** : Vertical lifting Horizontal Hanging*

*For hanging, we request that you fill in the safety checks when estimating.

⑤ **Load characteristics** : Smooth motion with no impact 1.0 1.1 1.2 1.3

: Motion with light impact 1.3 1.4 1.5

⑥ **Total weight of conveyed objects** : kg

⑦ **Temperature of operating environment** : ℃

⑧ **Required thrust** : ⑤ × ⑥ × Friction coefficient[ ] × 9.80665 = N

*For horizontal only (vertical lifting and hanging are 1.0)

⑨ **Required stroke** : mm

⑩ **Operating speed** : mm/sec

⑪ **End fitting fixture method** : Fixed Other ( )

⑫ **Guide mechanism** :

*Please give a concrete description.
***Be sure to install a guide mechanism.**

⑬ **Start frequency** : times*/min

*One cycle counts as two times

⑭ **Operating time** : hours/day days/year

⑮ **Operating cycle** : (Fill in primarily when the servomotor is used, etc.)

*We do not select servomotors. Selection is performed by the customer.

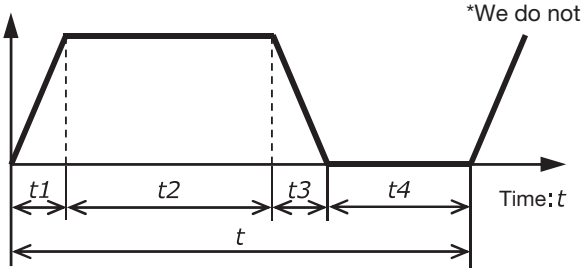

t1	(Acceleration time)	:	sec
t2	(Constant speed)	:	sec
t3	(Deceleration time)	:	sec
t4	(Shutdown time)	:	sec
t	(Cycle time)	:	sec

⑯ **Option** : (Select any options you would like. Some may not be supported depending on the ZCA size and combination.)

☐ With motor (60 Hz/50 Hz)
☐ Input shaft on the opposite side
☐ Mounting base
☐ Cap
☐ Bellows
☐ Dual shafts
☐ Bottom mounting base
☐ Grease plates
☐ With gear reducer for servomotor
Manufacturer **Motor model number** [ ]
☐ Other
[ ]

MEMO (requested items)

For safe use of the ZIP CHAIN ACTUATOR®

WARNING

Observe the items below to prevent danger.

- Do not release the brake when the load is acting on the zip chain actuator under any circumstances. If the brake is released while the load is acting on the zip chain actuator, the supported object may fall or the moving sections may suddenly start to move.
- Do not use the zip chain actuator in an explosive atmosphere. Doing so may cause the unit to become flammable, explode or catch fire, or result in personal injury.
- When the zip chain actuator is used in personnel transport equipment, install protective equipment for safety on the transport equipment. There is a risk of injury to personnel by runaway equipment and of damage to the equipment.
- When the zip chain actuator is used in lifting equipment, install safety equipment on the lifting equipment to prevent falling. There is a risk of injury to personnel from the lifted object falling and of damage to the equipment.
- When the Zip Chain Actuator is used in equipment hung from above, install a safeguard and safety fence as a precautionary measure in case a chain should fracture, and refrain from entering the area beneath any suspended objects.
- This product can be operated at extremely high speeds. Keep hands and any other part of the body, clothes or accessories away from any movable parts in the equipment ncluding the Zip Chain Actuator. Otherwise, they may be entangled or trapped in movable parts, resulting in personal injury or death and/or damage to the equipment.
- If a terminal box is used, do not operate the unit with the terminal box cover removed. When any work is performed on the terminal box, be sure to replace the cover after the work. Otherwise, it may result in electrical shock. Mount the cover securely.
- For transportation, installation, wiring, operation, maintenance and inspection of the unit:
  - · Always work by following the instructions in the instruction manual.
  - · Work must be performed by those who have specialized knowledge and skills. Otherwise explosion, ignition, fire, electrical shock, injury or damage to the equipment may result.
  - · In the electrical wiring, always observe the precautions listed in the instruction manual as well as the regulations in the electrical equipment standards and indoor wiring regulations. Grounding in particular is important for preventing electrocution, so always ensure that the product is reliably ground.
  - · Turn off the source power supply in advance and ensure that the switch cannot be unintentionally turned on. In the event of power stoppage, take the same action.
  - · Wear clothing suited to the work and wear the appropriate protective gear (safety goggles, gloves, safety footwear, other necessary safety equipment).
- Do not modify the Zip Chain Actuator

CAUTION

Observe the items below to prevent accidents.

- Do not use the zip chain actuator outside of the specified range listed on the nameplate and external diagrams and in the catalog. There is a risk of injury and equipment damage.
- Use the zip chain actuator within the appropriate power supply voltage range. There is a risk of burning out the motor and of fire when using the zip chain actuator outside this range.
- Check the rotational direction before incorporating the unit into the other equipment. Mounting the Zip Chain Actuator against the correct rotational direction may result in personal injury and/or damage to the unit.
- Do not insert your fingers or objects into the zip chain actuator opening. There is a risk of injury and equipment damage.
- Functionality and performance may decrease because of part wear and the lifespan of parts. Perform periodic inspections according to the instruction manual. If the unit shows degraded functionality and performance or is damaged, immediately stop operation and contact your local supplier. Not doing so may result in electrical shock, injury or fire.
- During the operation, the motor and speed reducer heat up to a high temperature. Keep hands or any other part of body from coming in contact with them. Otherwise, it may result in burn injury.
- Do not operate the unit with a load higher than the rated load applied. Doing so may result in injury and/or damage to the unit.
- Do not remove the nameplate.
- The guarantee of quality is only valid when an actuator is used that satisfies the required capabilities in the selection criteria established by Tsubaki and when it is used at the stipulated environmental conditions and maintained state.
- Customer alterations of the zip chain actuator are outside the scope of the Tsubaki warranty. Therefore, Tsubaki assumes no responsibility for these alterations.

Warranty

1. LIMITED WARRANTY

Products manufactured by Seller; (a) conform to the design and specifications if any, expressly agreed to in writing by Seller; and (b) are free of defects in workmanship and materials at the time of shipment. The warranties set forth in the preceding sentence are exclusive of all other warranties, express or implied, and extend only to Buyer and to no other person. All WARRANTIES OF MERCHANTABILITY OR FITNESS FOR A PARTICULAR PURPOSE ARE HEREBY EXCLUDED.

2. NON-RELIANCE

Buyer is not relying upon any advice, representations or warranties (except the warranties expressly set forth above) of Seller, or upon Seller's skill or judgment regarding the Seller's products. Buyer is solely responsible for the design and specifications of the products, including without limitation, the determination of suitability for Buyer's application of the products.

3. CLAIMS

(a) Any claim relating to quantity or type shall be made to Seller in writing within 7 days after receipt of the products; any such claim made thereafter shall be barred.

(b) Any claim under the above-stated Limited Warranty shall be made to Seller in writing within three (3) months after receipt of the products; any such claim made thereafter shall be barred.

(c) Seller's liability for breach of warranty or otherwise is limited to repair or replacement, at Seller's option of non-conforming or defective products. Buyer waives all other remedies, including but not limited to, all rights to consequential, special or incidental damages, including, but not limited to, damages resulting from personal injury, death or damage to or loss of use of property.

(d) Repair, alteration, neglect or misuse of the products shall void all applicable warranties.

4. INDEMNIFICATION

Buyer will indemnify, defend and hold Seller harmless from all loss, liability, damage and expense, including attorneys' fees, arising out of any claim (a) for infringement of any patent, trademark, copyright, misappropriation of trade secrets, unfair competition or similar charge by any products supplied by Seller in accordance with the design or specifications furnished by Buyer, or (b) arising out of or connected with the products or any items into which the products are incorporated, including, but not limited to, any claim for product liability (whether or not based on negligence or strict liability of Seller), breach of warranty, breach of contract or otherwise.

The logos, brand names, or product names in this catalog are trademarks or registered trademarks of Tsubakimoto Chain Co. and its subsidiaries in Japan, US and other countries.

TSUBAKIMOTO CHAIN CO.

Japan	Headquarters	+81 6-6441-0011	http://tsubakimoto.com
	Motion Control Division	+81 75-956-8138	

Global Group Companies

AMERICAS

United States of America	U.S. Tsubaki Power Transmission, LLC	+1 847-459-9500	http://www.ustsubaki.com/
Brazil	Tsubaki Brasil Equipamentos Industriais Ltda.	+55 11-3253-5656	http://tsubaki.ind.br/
Canada	Tsubaki of Canada Limited	+1 905-676-0400	http://tsubaki.ca/

EUROPE

Netherlands	Tsubakimoto Europe B.V.	+31 78-6204000	http://tsubaki.eu/
Germany	Tsubaki Deutschland GmbH	+49 89-2000-133-80	http://tsubaki.de/
Spain	Tsubaki Ibérica Power Transmission, S.L.	+34 911-873450	http://tsubaki.es/
United Kingdom	Tsubakimoto U.K. Ltd.	+44 1623-688-700	http://tsubaki.eu/

INDIAN OCEAN RIM

Singapore	Tsubakimoto Singapore Pte. Ltd.	+65 6861-0422/3/4	http://tsubaki.sg/
Australia	Tsubaki Australia Pty. Limited	+61 2-9704-2500	http://tsubaki.com.au/
India	Tsubaki India Power Transmission Private Limited	+91 44-7101-2000	http://tsubaki.in/
Indonesia	PT. Tsubaki Indonesia Trading	+62 21-8945-8898	http://tsubakimoto.co.id/
Malaysia	Tsubaki Power Transmission (Malaysia) Sdn. Bhd.	+60 3-8966-2020	http://tsubaki.my/
New Zealand	Tsubaki Australia Pty. Limited - New Zealand Branch	+64 9 352-2085	http://tsubaki.com.au/
Philippines	Tsubakimoto Philippines Corporation	+63 2-808-0067	http://tsubaki.ph/
Thailand	Tsubakimoto (Thailand) Co., Ltd.	+66 2-262-0667/9	http://tsubaki.co.th/
Vietnam	Tsubakimoto Vietnam Co., Ltd.	+84 4-6274-1449	http://tsubaki.net.vn/

EAST ASIA

Korea	Tsubakimoto Korea Co., Ltd.	+82 2-2183-0311	http://tsubakimoto-tck.co.kr/
Taiwan	Taiwan Tsubakimoto Co.	+886 33-293827/8/9	http://tsubakimoto.com.tw/

CHINA

China	Tsubakimoto Chain (Shanghai) Co., Ltd.	+86 215396-6651/2	http://tsubaki.cn/

The Tsubaki Eco Link logo is used only on products
that satisfy the standards for environmental friendliness set by the Tsubaki Group.

Distributed by:

Note: In accordance with the policy of TSUBAKIMOTO CHAIN CO. to constantly improve its products, the specifications in this catalog are subject to change without notice.

Catalog No. 985K559 ©2018/12 TSUBAKIMOTO CHAIN CO.