Innovation in Motion
TSUBAKI

TSUBAKI
ECHT-FLEX COUPLING

CONTENTS

INDEX P.2

PRODUCT FEATURES P.3-4

PRODUCT STRUCTURE P.5-6

PRODUCT APPLICATIONS P.7-8

PRODUCT SELECTION P.9-10

MODEL LIST P.11

NEF-HUB. P.12

NES Series P.13-19

NEF Series

- Spacer Type P.20-21
- Long Spacer Type P.22-23
- Stocked Long Spacer Type P.24
- Short Spacer Type. P.25
- Single Type P.26-27
- Clamping Method P.28-30
- Taper-Lock Method P.31-33

NEH Series P.34-35

Other Series P.36-37

INSTALLATION P.38-41

BORE SPECIFICATIONS P.42-44

INDEX

PRODUCT SERIES LIST

NEW
NES Series

See P. 13–19

NES Series products are small disk couplings that use extra super duralumin.
Both spacer-type and single-type couplings are available.

NEF
Spacer Type
Rough or keyed bore

See P. 20–21

With Spacer Type, two disk sets absorb angular misalignment, parallel misalignment and axial displacement.

NEF
Long Spacer Type
Rough or keyed bore

See P. 22–25

Long Spacer Type acts as a floating shaft when the distance between shaft ends is large.

NEF
Single Type
Rough or keyed bore

See P. 26–27

With Single Type, a single disk absorbs angular misalignment and axial displacement.

NEF
Clamping Method

See P. 28–30

Refer to the page noted above when using the clamping method to connect to shafts (friction coupling by tightening one bolt).

NEF
Taper-Lock Method

See P. 31–33

Refer to the page noted above when using the Taper-Lock method to connect to shafts.

NEH Series

See P. 34–35

NEH Series products are large-size, spacer type couplings.

Other Series

See P. 36–37

Tsubaki can manufacture a coupling to suit most any application, such as our G Type products that are compatible with gear couplings.

ECHT-FLEX COUPLING

In order to make the ECHT-FLEX COUPLING the ultimate disk coupling, Tsubaki optimized its design using finite element analysis. This coupling will meet all of your needs with no lubrication, no backlash, and with improved torsional stiffness for greater precision. This adds up to excellent flexible coupling performance for reliable torque transmission and absorption of shaft misalignment. Tsubaki offers a full line-up of ECHT-FLEX couplings, from the small-size precision NES Series offering a minimum of 0.7N·m torque transmission to the large size NEH Series delivering up to 176000N·m torque transmission. Our easy-to-select and convenient wide range of models include the Long Spacer Type, which functions as a floating shaft; the U-Type that enables spacer mounting and dismounting without disassembling the disk connecting section; the G-Type, which can replace gear couplings and other types that use various shaft coupling methods (Power-Lock, keyway, clamp, etc.) These ECHT-FLEX couplings are ready to meet all of your next-generation coupling needs.

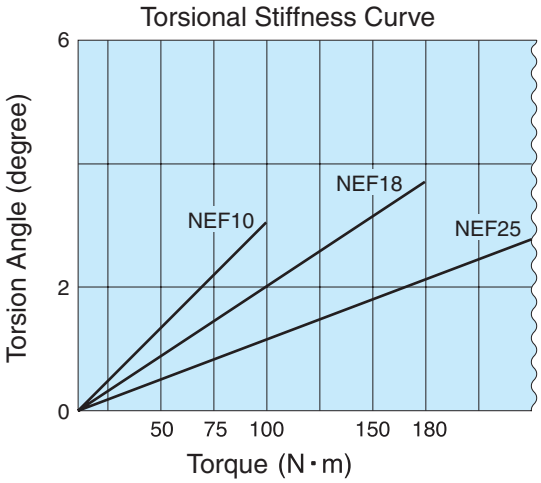

Disk (Supports high torsional stiffness)

Strength analysis is used to determine the optimum shape.

PRODUCT FEATURES

1 Finish Bored Couplings

Single-Type and Spacer-Type couplings with pre-machined, standard diameter shaft bores (new JIS key standard type) are always in stock and available for fast deliveries.

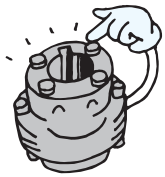

2 Lubrication Free

With no sliding or moving parts, there are no friction faces and lubrication is unnecessary.

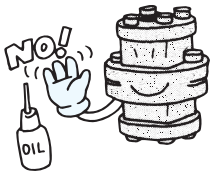

3 No Backlash

Torque is transmitted by friction connections, so there is no backlash and minimum hysteresis. This makes the ECHT-FLEX suitable for servo motor and other applications that need high-precision power transmissions.

4 High Torsional Stiffness

With high torsional stiffness, elastic deformation is greatly reduced so even slight rotation movement is precisely transmitted to driven side.

5 Low Moment of Inertia

We have eliminated unnecessary flange portions, and offer a unique square hub, resulting in minimum moment of inertia. With the NES Series, the hub and spacer are made of extra super duralumin, which considerably reduces weight.

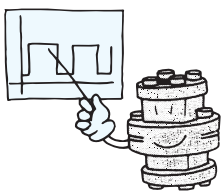

6 Long Service Life

With the anti-wear parts, the ECHT-FLEX Couplings have an amazingly long useable life.

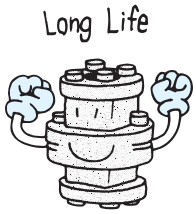

7 Original TSUBAKI Disk Design

Our original disk design achieves high torsional stiffness and axial flexibility.

8 Axial Flexibility

When the motor shaft expands due to heat generated during operation, the coupling absorbs the expansion and does not generate unnecessary thrust power against bearing.

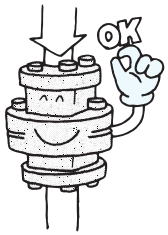

9 Excellent with Servo Motors

A new production method makes this coupling strong and lightweight. With the addition of the NES Series, we have couplings that are suitable for small to large servo motor.

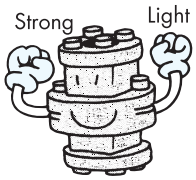

10 Floating Shaft Function

Long Spacer Type acts as a floating shaft, allowing the transmittance of power from a drive unit at some distance, without the use of bearings.

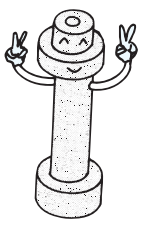

11 Excellent Environmental Durability

Because the ECHT-FLEX is an all-metal coupling without lubrication, it can stand up to high temperatures. The unit surface is also specially treated so it can withstand virtually any environment.

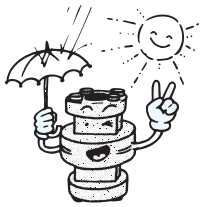

12 Easy Installation

The Power-Lock Type is equipped with an anti-rotation hole in the pressure flange, so tightening bolts is made easy, with no shaft rotation. With the U-Type couplings (Unit Spacer Type), the spacer can be mounted and dismounted without disassembling the disk connecting section.

13 Quick Delivery

In addition to our product inventory with standard shaft bore diameters, Tsubaki can offer products with other shaft bore diameters with short delivery times.

PRODUCT STRUCTURE

NEF Series

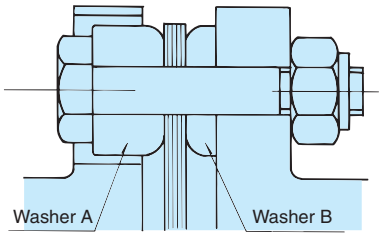

Single Type

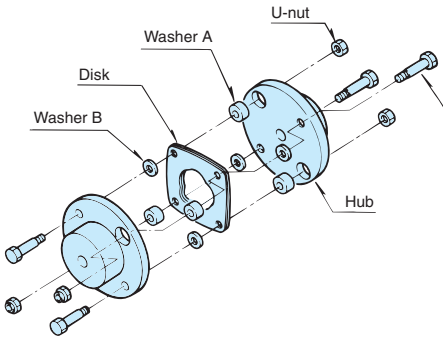

Spacer Type

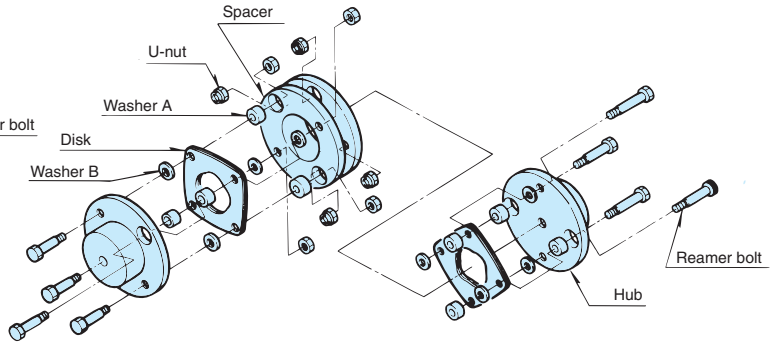

NES Series

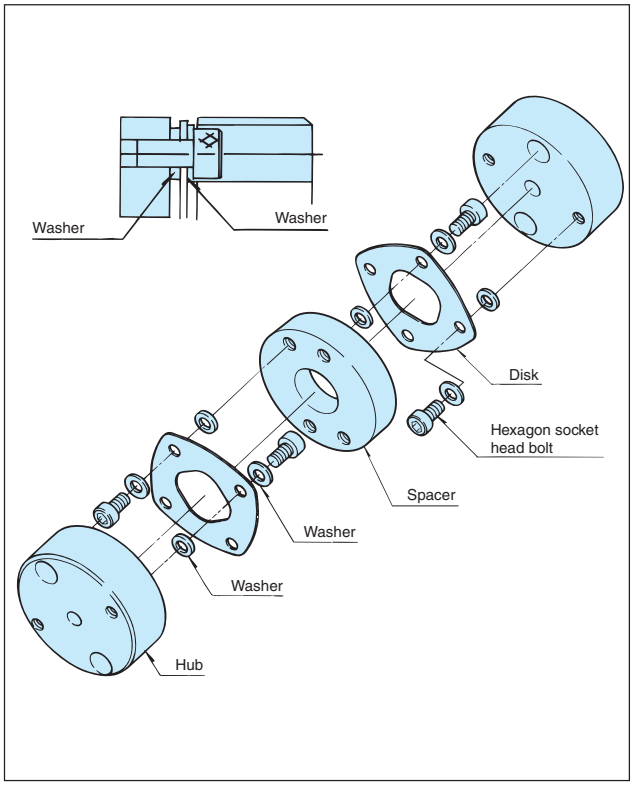

NEH Series

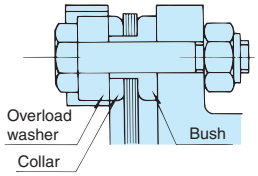

The disk, bush and collar are all integrated.

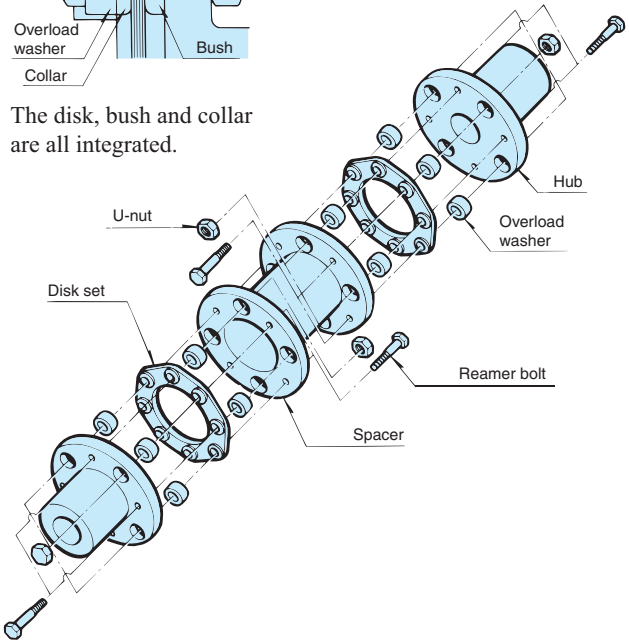

NEF Series Long Spacer Type

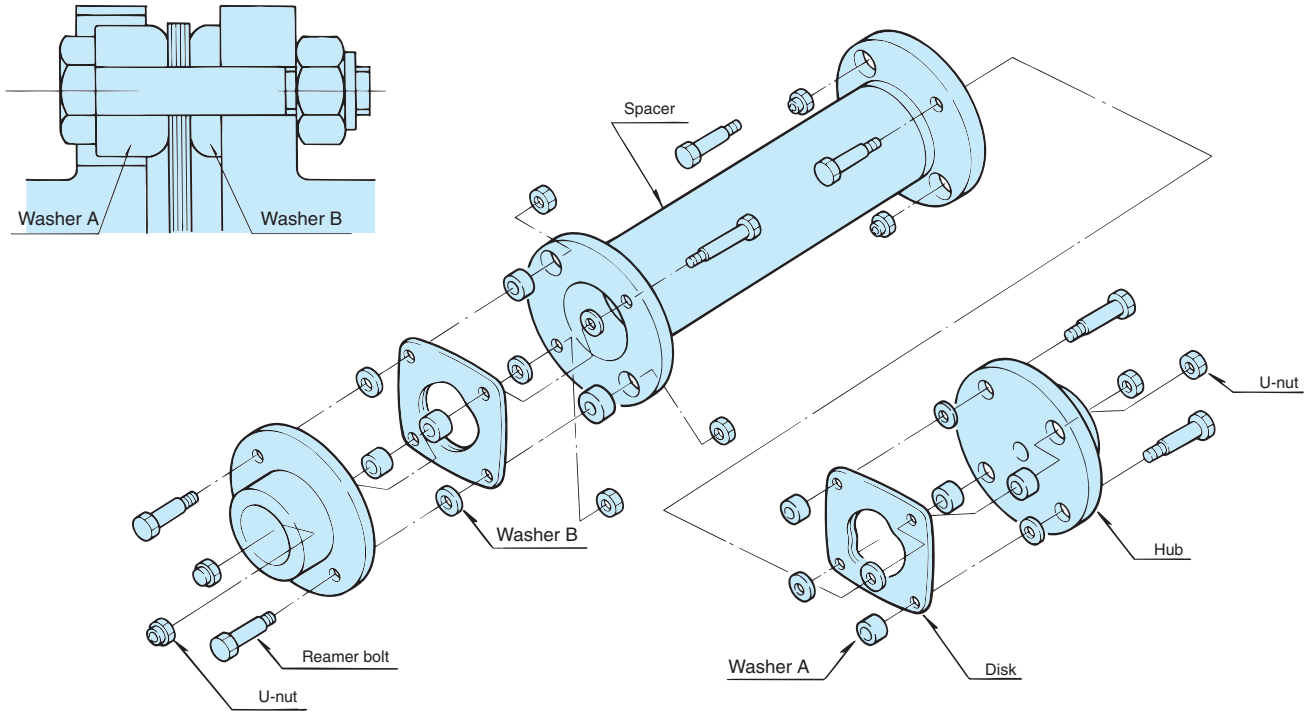

NEH Series Long Spacer Type

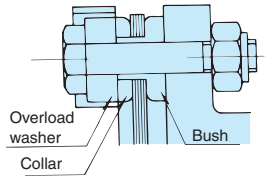

The disk, bush and collar are all integrated.

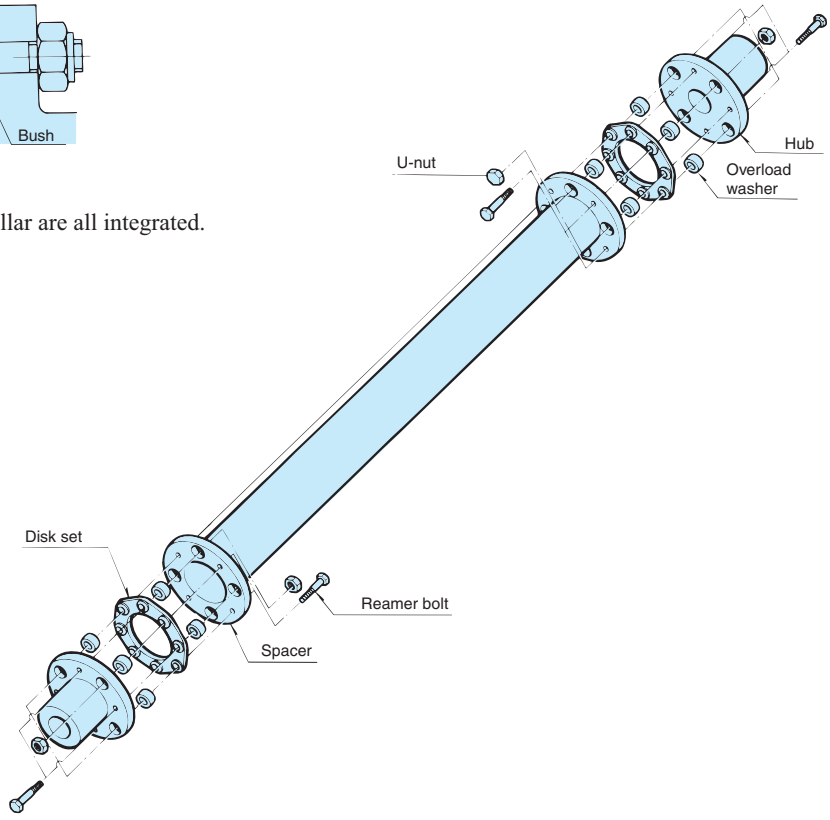

PRODUCT APPLICATIONS

NC machining centers

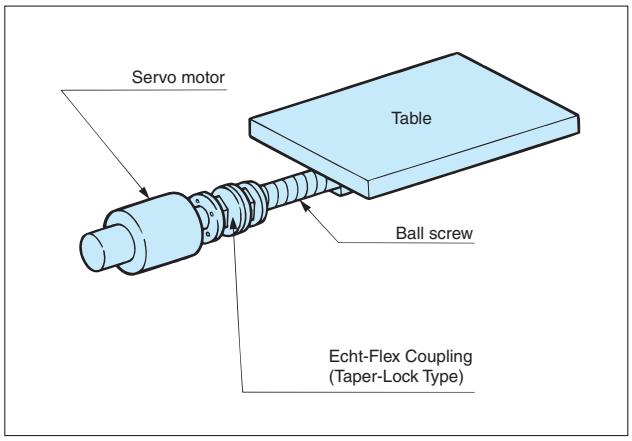

Lifters

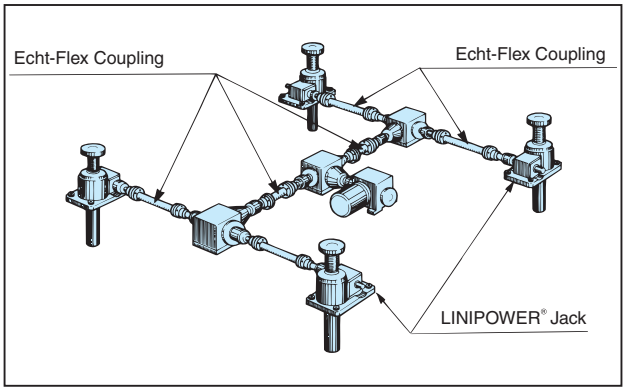

Windmills

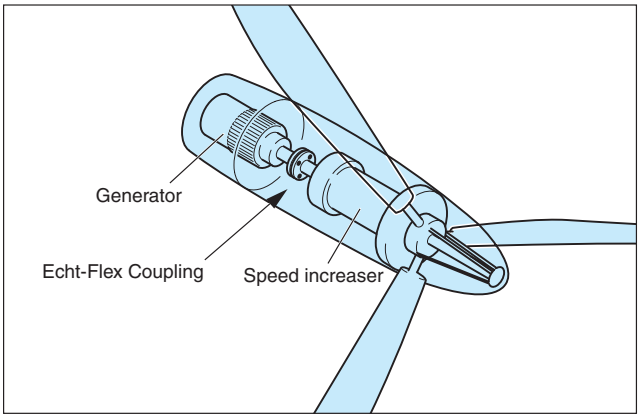

Printing presses

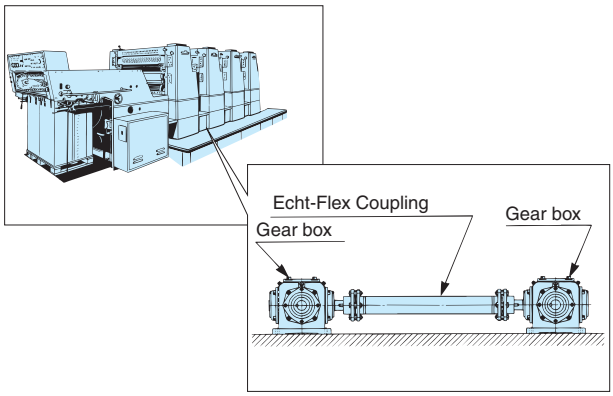

Robots

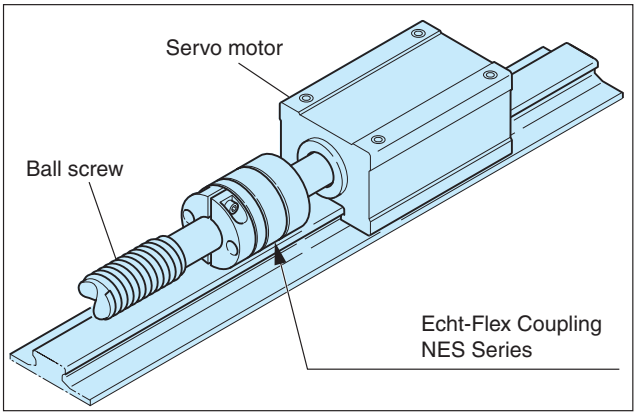

Elevator-type vertical parking lots

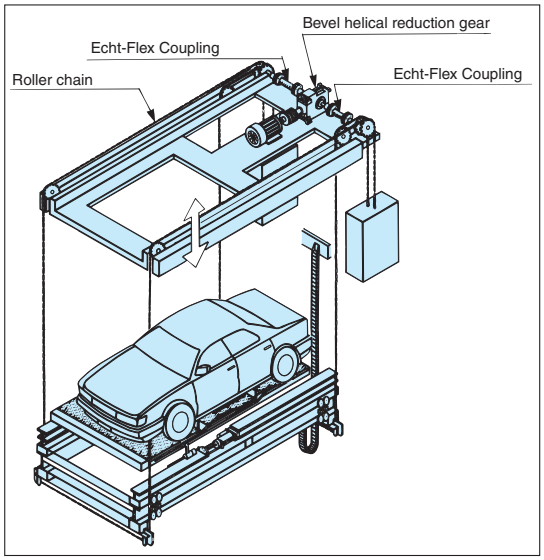

Example of Mounting

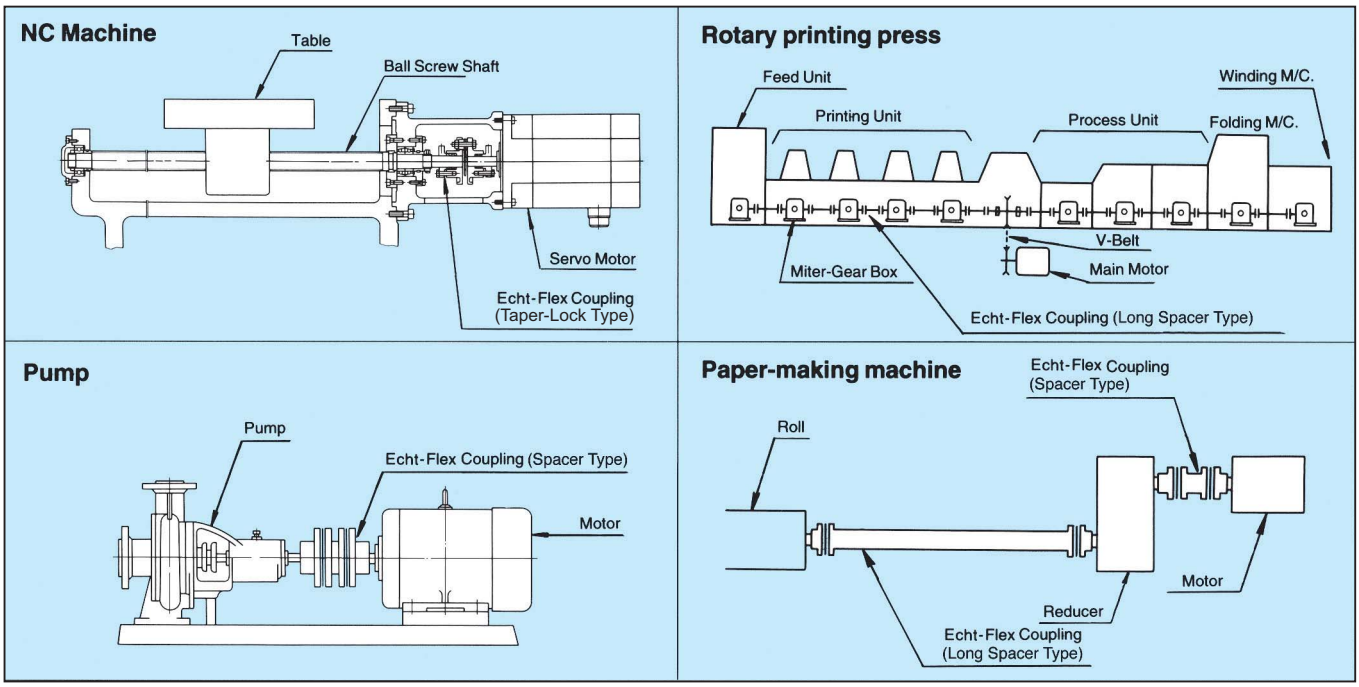

PRODUCT SELECTION

1. Correct torque calculation

1-1. When connecting to a servo motor or stepping motor

To determine the correct torque, multiply the maximum torque of the servo motor or stepping motor by the service factor (SF) corresponding to the type of load listed in the table below.

Service Factor (SF) Table

Type of Load	Constant Load	Mid-Level Variable Load	Heavy Variable Load
Service Factor (SF)	1.2	1.4	1.5

1-2. When connecting to a general-purpose motor

To determine the correct torque, multiply the load torque calculated with the following formula by the service factor (SF) corresponding to the type of load listed in the table on the right.

$$T = \frac{60000 \times P}{2\pi \times n} \left\{ T = \frac{974 \times P}{n} \right\}$$

$$T' = T \times SF$$

T = Load torque N·m {kgf·m}

P = Transmission power kW

n = Rotation speed r/min

T = Correct torque N·m {kgf·m}

Service Factor (SF) Table

Type of Load	Type of Motor				
	General-Purpose Motor / Gas Turbine		Engine		
	Low Moment of Inertia	High Moment of Inertia	4-Cylinder	6-Cylinder	8-Cylinder
Constant Load	1.5–1.75	1.75–2.0	2.5–4.0	2.0–2.5	1.5–2.0
Mid-Level Variable Load	2.0–2.5	2.5–3.0	4.0–5.0	2.5–3.5	2.0–3.0
Heavy Variable Load	3.0–4.5	4.5–6.0	4.5–5.5	3.0–4.0	2.5–3.5

* If an impact load is expected, determine the correct torque by multiplying the maximum torque rated for the motor by an impact factor of 1 to 2.5.
* When clamp method is used, do not allow torque that is larger than the shaft bore friction transmission torque (see p. 30), including the starting torque, even for an instant.

2. Shaft Diameter

Make sure that the target shaft diameter does not exceed the allowable mounting shaft diameter for the coupling.
With the Power-Lock, check the power lock size, quantity and transmission torque.
With the clamp type, make sure that the correct torque determined in Item (1) does not exceed the allowable transmission torque for the clamp.

3. Maximum Rotation Speed for Long Spacer Types

When using the Long Spacer Type coupling at a high speed rotation, the rotation speed must be checked in order to avoid the resonance point.
When selecting the Long Spacer Type coupling, make sure that the maximum dimension "J" and the rotation speed for each model are not exceeded.
If the operating rotation speed exceeds the specified value, a larger model number must be selected.
If the operating rotation speed is not within the following range, or if the selection of a larger model number is not an option, a "High-Speed Type Long Spacer" coupling can be manufactured as one solution. (See p. 37)

Unit: mm

Operating Rotation Speed r/min / Model No.	Long Spacer Maximum Length (Dimension "J")														
	3600	2000	1800	1500	1200	1000	900	750	720	600	500	400	300	200	150
NEF 04W	980	1310	1380	1510	1680	1840	1940	2130	2170	2380	2610	2910	3360	4120	4750
NEF 10W	1120	1500	1580	1730	1940	2120	2230	2450	2500	2730	2990	3350	3860	4730	5460
NEF 18W	1180	1580	1660	1820	2040	2230	2350	2570	2620	2870	3150	3520	4060	4970	5740
NEF 25W	1310	1760	1850	2030	2260	2480	2610	2860	2920	3190	3500	3910	4510	5520	
NEF 45W	1440	1930	2030	2230	2490	2720	2870	3140	3210	3510	3840	4290	4960		
NEF 80W	1560	2090	2200	2410	2690	2950	3100	3400	3470	3800	4160	4650	5360		
NEF130W	1780	2380	2510	2750	3070	3360	3540	3870	3950	4330	4740	5290			
NEF210W	1890	2520	2660	2910	3250	3560	3750	4100	4190	4580	5020	5610			
NEF340W	2024	2720	2870	3130	3500	3830	4040	4420	4510	4930	5400				
NEF540W	2180	2910	3070	3360	3750	4100	4320	4730	4820	5280	5780				
NEF700W	2270	3030	3190	3490	3890	4260	4490	4910	5010	5490					
NEH 09W	2190	2930	3090	3380	3780	4130	4360	4770	4870	5330	5830				
NEH 14W	2190	2930	3090	3380	3780	4130	4360	4770	4870	5330	5830				
NEH 20W	2400	3200	3380	3690	4130	4520	4760	5210	5320	5820					
NEH 30W	2570	3430	3610	3960	4420	4840	5100	5580	5690						
NEH 41W	2650	3540	3730	4080	4560	4990	5260	5760	5870						

4. Precautions for Connecting a Servo Motor Drive System

Depending on the natural frequency and electric control status of the system as a whole, a ball screw drive system using a servo motor may generate large vibration or abnormal sound caused by oscillation due to the characteristics of the servo motor. In this case, adjust the torsional stiffness and moment of inertia of the overall drive system to increase the torsional natural frequency, or adjust the servo gain with the electric control tuning function of the servo motor.

5. Select the ECHT-FLEX Coupling that Meets the above Requirements, 1 through 4, from the Transmission Capacity Table.

Dynamic Balance Adjustment

Normally, because ECHT-FLEX couplings provide a well-balanced design, they need no particular balance adjustment. However, when the coupling is used at a high rotation speed, or when a long spacer is used, balance adjustment may be required.
In this case, inform us of your desired operating rotation speed, JIS balance rating, dimension "J", or spacer length so that we can perform your balance adjustment.
For dynamic balance adjustment, we use the following two methods:
1) Drilling the spacer flange end face, and
2) Mounting a balance weight to the spacer pipe periphery. (The spacer with a balance weight is shown below. The balance weight mounting position and quantity vary depending on operating conditions. Be careful not to interfere with the balance weight during rotation.)
When requesting a balance adjustment, specify either method 1) or 2) above.

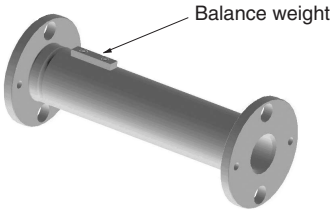

A Spacer Mounted with a Balance weight

Notes for Large Distance between Shaft Ends

For large distance between shaft ends, Tsubaki offers a Long Spacer Type that can be used in a floating state without the need for an intermediate shaft bearing. We recommend this type of coupling if it fits your application needs.

If an intermediate shaft bearing is being used instead of the Long Spacer Type coupling for reasons of convenience, fasten the intermediate shaft with a bearing to prevent the intermediate shaft from floating. In this case, it is recommended that the Spacer-Type disk coupling be used.

Long Spacer Type

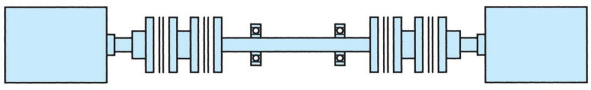

Spacer Type + Fixed intermediate shaft + Spacer Type

If the distance between shafts is short and an intermediate shaft is used in a floating condition, be sure to use the Single-Type coupling.

Never use the Spacer-Type coupling under such conditions; it is very dangerous due to the marked floating tendency of the intermediate shaft.

Single Type + Floating intermediate shaft + Single Type

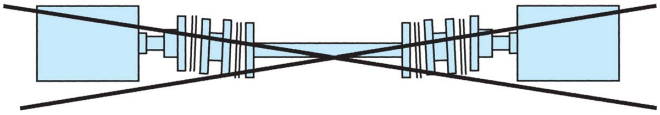

Spacer Type + Floating intermediate shaft + Spacer Type

Pay special attention to the above when replacing gear couplings or roller chain couplings with disk couplings.

MODEL LIST

Type / Model No.	Allowable Torque N·m {kgf·m}	Keyway Max. Bore Diameter φ		Rough Bore (Spacer Type)	Rough Bore (Single Type)	Standard Length (Long Spacer Type)	Long Spacer Type	Type of Hub						Bore Machining				G-Type	A-Hub Type	U-Type
		Standard Hub	Extended-Dia. Hub					Straight Hub	Low Inertia Hub	Standard Hub	Extended-Dia. Hub	Long Hub	Square Hub	Keyway	Taper-Lock	Clamp	Tapered Bore (φ 11, φ 16)			
NES07	0.7 {0.07}	–	–	–	–	–	–	○	–	–	–	–	–		–	○	–	–	–	–
NES15	1.5 {0.15}	–	–	–	–	–	–	○	–	–	–	–	–		–	○	–	–	–	–
NES20	2 {0.2}	–	–	–	–	–	–	○	–	–	–	–	–		–	○	–	–	–	–
NES30	3 {0.31}	–	–	–	–	–	–	○	–	–	–	–	–		–	○	–	–	–	–
NES50	5 {0.51}	–	–	–	–	–	–	○	○	–	–	–	–	–	–	○	–	–	–	–
NES70	7 {0.71}	–	–	–	–	–	–	○	○	–	–	–	–	–	–	○	–	–	–	–
NES100	10 {1}	–	–	–	–	–	–	○	○	–	–	–	–	–	–	○	Contact us for consultation on these model types.	–	–	–
NES250	25 {2.6}	–	–	–	–	–	–	○	○	–	–	–	–	–	–	○		–	–	–
NES800	80 {8.2}	–	–	–	–	–	–	○	○	–	–	–	–	–	–	○		–	–	–
NES1300	130 {13}	–	–	–	–	–	–	○	○	–	–	–	–	–	–	○		–	–	–
NES2000	200 {20.4}	–	–	–	–	–	–	○	○	–	–	–	–	–	–	○	–	–	–	–
NES3000	300 {30.6}	–	–	–	–	–	–	○	○	–	–	–	–	–	–	○	–	–	–	–
NEF02	19.6 {2}	20	25	○	○	–	–	–	–	○	○	○	–	○	–	○	△	–	–	–
NEF04	39.2 {4}	23	28	○	○	–	△	–	–	○	○	○	–	○	○	○	△	–	–	–
NEF10	98 {10}	32	40	○	○	○	△	–	–	○	○	○	○	○	○	○	○	–	–	–
NEF18	176 {18}	35	42	○	○	○	△	–	–	○	○	○	○	○	○	○	–	–	–	–
NEF25	245 {25}	42	48	○	○	○	△	–	–	○	○	○	○	○	○	○	–	–	–	–
NEF45	441 {45}	50	60	○	○	○	△	–	–	○	○	○	–	○	–	○	–	△	–	–
NEF80	784 {80}	60	70	○	○	○	△	–	–	○	○	○	–	○	–	–	–	△	–	–
NEF130	1270 {130}	74	80	○	○	○	△	–	–	○	○	○	–	○	–	–	–	△	–	–
NEF210	2060 {210}	83	90	○	○	○	△	–	–	○	○	○	–	△	–	–	–	△	–	–
NEF340	3330 {340}	95	110	○	○	○	△	–	–	○	○	○	–	△	–	–	–	△	–	–
NEF540	5290 {540}	109	120	○	○	–	△	–	–	○	○	○	–	△	–	–	–	△	–	–
NEF700	6860 {700}	118	130	○	○	–	△	–	–	○	○	○	–	△	–	–	–	△	–	–
NEH09	8820 {900}	111	(158)	○	Contact us for consultation on these model types.	–	△	–	–	○	–	Contact us for consultation on these model types.	–	△	Contact us for consultation on these model types.	–	–	△	△	△
NEH14	13700 {1400}	111	(158)	○		–	△	–	–	○	–		–	△		–	–	△	△	△
NEH20	19600 {2000}	133	(182)	○		–	△	–	–	○	–		–	△		–	–	△	△	△
NEH30	29400 {3000}	152	(206)	○		–	△	–	–	○	–		–	△		–	–	△	△	△
NEH41	40200 {4100}	165	(224)	○		–	△	–	–	○	–		–	△		–	–	△	△	△
NEH55	53900 {5500}	187	–	△		–	△	–	–	△	–		–	△		–	–	Contact us for consultation on these model types.		
NEH70	68600 {7000}	205	–	△		–	△	–	–	△	–		–	△		–	–			
NEH90	88200 {9000}	231	–	△		–	△	–	–	△	–		–	△		–	–			
NEH110	108000 {11000}	254	–	△		–	△	–	–	△	–		–	△		–	–			
NEH135	132000 {13500}	263	–	△		–	△	–	–	△	–		–	△		–	–			
NEH150	147000 {15000}	275	–	△		–	△	–	–	△	–		–	△		–	–			
NEH180	176000 {18000}	289	–	△		–	△	–	–	△	–		–	△		–	–			

Values in parentheses for the NEH09 to NEH41 apply to the A-hub and U-types.

○ : Standard
△ : Custom-made

NEF Series Hub Dimensions

● Extended-Diameter Hubs

If the target shaft diameter exceeds the maximum shaft bore diameter of the standard hub regardless of there being sufficient leeway in the transmission capacity, you may select the extended-diameter hub that provides a larger boss diameter (dimension “H”). This way you can avoid increasing the model size.

● Long Hubs

If the key surface pressure is too high with the standard hub, you may select the long hub that provides a longer dimension “B”, which lowers the key surface pressure.

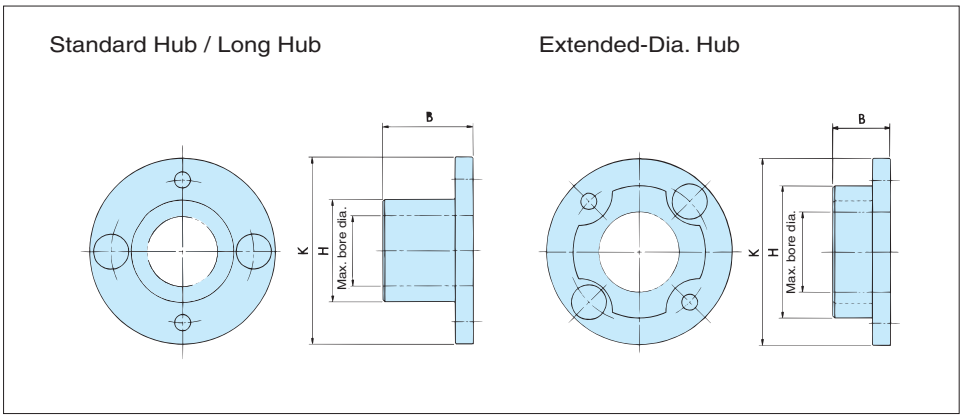

DIMENSIONS

Unit: mm

Model No.	K	B		H		Rough Bore d	Max. Bore Dia.	
							Standard Hub / Long Hub	Extended-Dia. Hub
		Standard Hub Extended-Dia. Hub	Long Hub	Standard Hub Long Hub	Extended-Dia. Hub		Keyway	Keyway
NEF02	57	20	—	32* Note 1	45	8	20	25
NEF04	67.5	25.4	40	34	50	8	23	28
NEF10	81	25.4	40	46	66	10	32	40
NEF18	93	28.7	45	51	66	12	35	42
NEF25	104	33.5	50	61	78	15	42	48
NEF45	126	41.1	60	71	92	15	50	60
NEF80	143	47.8	70	84	104	15	60	70
NEF130	168	57.2	85	106	129	25	74	80
NEF210	194	63.5	120	118	147	25	83	90
NEF340	214	76.2	140	137	166	45	95	110
NEF540	246	88.9	140	156	191	50	109	120
NEF700	276	101.6	150	169	209	50	118	130

* Note: Only the standard hub can be used with the NEF02.

Small-Size, Precision: NES Series

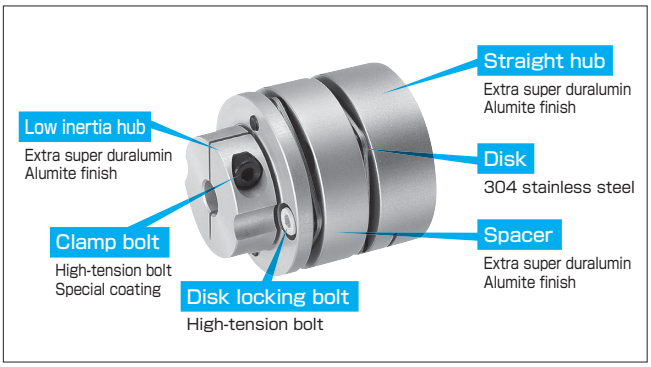

- Connection to small servo motors and stepping motors for semiconductor manufacturing equipment, etc.
- Connection between servo motors and ball screws in machine tools, etc.
- Industrial robots, electronic equipment, precision instruments, etc.

Low moment of inertia & high torsional stiffness

For low moment of inertia

Combination of low inertia hubs

With its unique stepped design, the hub achieves the ultimate in low inertia.

For high torsional stiffness

Combination of straight hubs

This model offers exceptionally high torsional stiffness.

For taking advantage of both types

Combination of low inertia and straight hubs

This model combines a low inertia hub and straight hub.

Low inertia moment

The hub adopts light-weight and highly durable extra super duralumin. Our original hub geometry is used to achieve a low moment of inertia. This is ideal for high acceleration/deceleration operation of servo motors and other applications.

High torsional stiffness

With its high torsional stiffness and excellent following capacity for servo motors, our straight hub is ideal for precision control applications.

High torque and secure clamping force

The clamping force on shafts is improved by using our original clamp geometry.

Overwhelmingly large product lineup

The NES Series serve a wide range of needs with 56 types and 3,252 combinations of shaft bore diameters. This extensive lineup is unrivalled by our competitors.

No backlash

All torque is transmitted via friction coupling to eliminate backlash. Together with its high torsional stiffness, this feature makes the NES Series ideal for precision positioning applications.

Easy to install

The hub on both sides is centered using a special jig, and assembled while ensuring concentricity. The NES Series adopts a clamping method for connection with the shaft, allowing the hub to be clamped onto the shaft by simply tightening one clamp bolt on each hub.

Environmentally friendly

The NES Series meets the requirements of RoHS directives, as well as harmful chemical substance regulations of JIG, PFOS, and SVHCs (15 substances).

Spacer Type Coupling: Low Inertia Hub x Low Inertia Hub

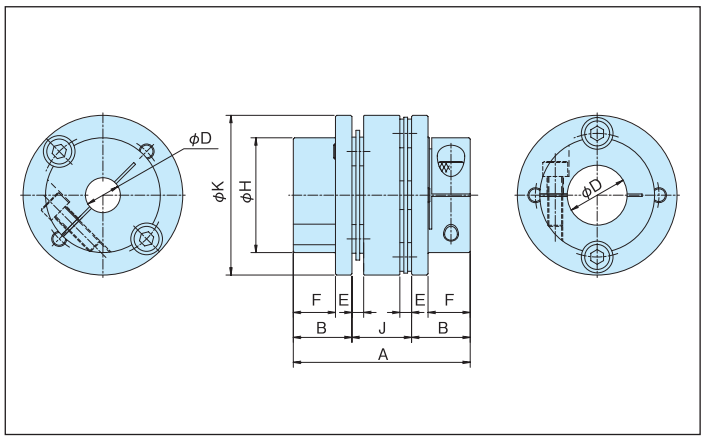

Reference Number System (Example)

NES 250 W – D10 C X D15 C

- NES: Series
- 250: Size
- W: Spacer Type
- D10: Shaft Bore Diameter (mm) (ø6.35 and ø9.525 are shown as 6.3 and 9.5 respectively.)
- C: Type of Hub D: Low inertia hub
- X: Clamp Shaft Bore
- D15: Shaft Bore Diameter (mm) (ø6.35 and ø9.525 are shown as 6.3 and 9.5 respectively.)
- C: Type of Hub D: Low inertia hub

∗ Indicate the smaller bore diameter first.

Model No.	Allowable Torque N·m {kgf·m}	Note 1) Max. Rotation speed r/min	Notes 4) Shaft Bore Diameter φD mm		Dimensions mm								Torsional Stiffness N·m/rad {kgf·m/rad}		Axial Spring Constant N/mm {kgf/mm}	Note 3) Allowable Misalignment			Note 2) Weight g	Note 2) Moment of Inertia kg·m²	Note 2) GD² {kgf·cm²}
			Range of Shaft Bore Diameters	Standard Shaft Bore Diameter	A	B	E	F	H	φK	J	Through Shaft Allowable Max. Diameter	Whole Coupling	Disk only		Angular Misalignment deg	Parallel Misalignment mm	Axial Displacement mm			
NES50W	5.0 {0.51}	18000	5~10	Refer to the table of Standard Shaft Bore Diameter (in the table below).	37	12.5	1.5	9.3	21.5	34	12	13	1600 {160}	6500 {660}	25 {2.6}	2.0	0.18	±0.80	52	7.1×10⁻⁶	0.28
NES70W	7.0 {0.71}	18000	8~14		45.5	15	1.75	11.8	26	37	15.5	16	2700 {280}	9500 {970}	29 {3.0}	2.0	0.24	±0.90	76	12.8×10⁻⁶	0.51
NES100W	10 {1.0}	15000	8~15		48.1	15.7	2.6	11.5	29.5	44	16.7	17	4600 {470}	15000 {1500}	33 {3.4}	2.0	0.25	±1.1	125	28.8 ×10⁻⁶	1.15
NES250W	25 {2.6}	10000	10~20		59	20	3	14.4	38	55	19	22	8400 {860}	22000 {2200}	11 {1.1}	2.0	0.28	±1.4	230	83.1 ×10⁻⁶	3.32
NES800W	80 {8.2}	10000	14~24		70.9	23.5	4.7	16.9	46	64	23.9	25	17000 {1700}	39000 {4000}	27 {2.8}	2.0	0.34	±1.4	380	188 ×10⁻⁶	7.52
NES1300W	130 {13}	10000	19~32		97.9	31.5	5.2	22.6	54	82	34.9	36	28000 {2900}	110000 {11000}	33 {3.4}	2.0	0.52	±1.8	810	671 ×10⁻⁶	26.8
NES2000W	200 {20.4}	9000	25~35		98.6	30.5	5.6	21.6	69	92	37.6	45	46000 {4700}	270000 {27600}	43 {4.4}	2.0	0.56	±1.4	1140	1230 ×10⁻⁶	49.2
NES3000W	300 {30.6}	8000	32~42		101.6	31.2	7.6	21	79	104	39.2	50	49000 {5000}	300000 {30600}	64 {6.5}	2.0	0.55	±1.8	1580	2230 ×10⁻⁶	89.2

Notes 1. The maximum rotation speed does not take dynamic balance into consideration.
2.The weight, moment of inertia, and GD² are the values at maximum shaft bore diameter.
3.Each allowable misalignment is based on the assumption that both of the other two misalignment values are 0 (zero).
4.The columns with values in the table below are the standard shaft bore diameters. The figures indicate transmission torques.
5.Recommended tolerance for mounting shaft is h7. Note, however, for the ø35 shaft bore diameter, the recommended servo motor shaft bore tolerance is (+0.010 to 0).

Transmission Torque by Standard Shaft Diameter and Shaft Bore Diameter (N·m)

Model No.	Bolt Size	Tightening Torque N·m {kgf·m}	Standard Shaft Bore Diameter (mm)																											
			5	6	6.35	7	8	9	9.525	10	11	12	14	15	16	17	18	19	20	22	24	25	28	30	32	35	38	40	42
NES50	M3	1.9 {0.19}	5	5	5	5	5	5	5	5																			
NES70	M3	1.9 {0.19}					7	7	7	7	7	7	7																
NES100	M4	3.8 {0.39}					10	10	10	10	10	10	10	10															
NES250	M4	3.8 {0.39}								25	25	25	25	25	25	25	25	25	25										
NES800	M6	12 {1.22}											80	80	80	80	80	80	80	80	80								
NES1300	M6	12 {1.22}																105	105	110	115	120	125	130	130				
NES2000	M8	30 {3.1}																				200	200	200	200	200			
NES3000	M8	30 {3.1}																							235	245	255	260	265

Single Type Coupling: Low Inertia Hub x Low Inertia Hub

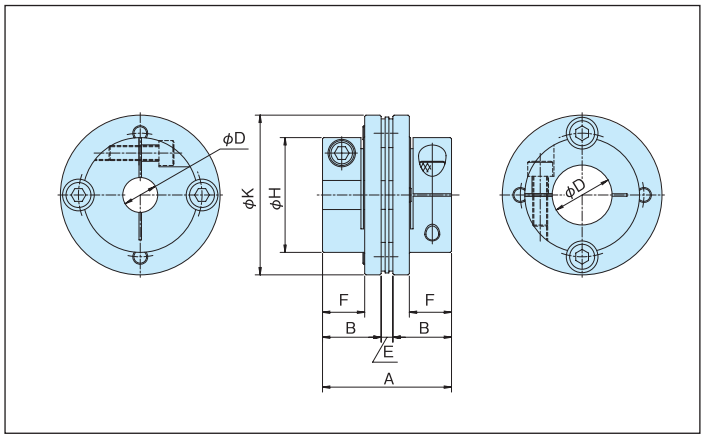

Reference Number System (Example)

NES 800 S – D16 C X D 24 C

- NES: Series
- 800: Size
- S: Single Type
- D16 C: Shaft Bore Diameter (mm) (ø6.35 and ø9.525 are shown as 6.3 and 9.5 respectively.)
- X D: Type of Hub D: Low inertia hub
- 24 C: Clamp Shaft Bore

∗ Indicate the smaller bore diameter first.

Model No.	Allowable Torque N·m {kgf·m}	Note 1) Max. Rotation speed r/min	Notes 4) Shaft Bore Diameter φD mm: Range of Shaft Bore Diameters	Standard Shaft Bore Diameter	Dimensions mm: A	B	E	F	H	φK	Torsional Stiffness N·m/rad {kgf·m/rad}: Whole Coupling	Disk only	Axial Spring Constant N/mm {kgf/mm}	Note 3) Allowable Misalignment: Angular Misalignment deg	Parallel Misalignment mm	Axial Displacement mm	Note 2) Weight g	Note 2) Moment of Inertia kg·m²	Note 2) GD² {kgf·cm²}
NES50S	5.0 {0.51}	18000	5~10	Refer to the table of Standard Shaft Bore Diameter (on previous page).	26.5	12.5	1.5	9.3	21.5	34	2700 {280}	13000 {1300}	51 {5.2}	1.0	0.02	±0.40	34	3.9×10^{-6}	0.16
NES70S	7.0 {0.71}	18000	8~14		31.75	15	1.75	11.8	26	37	3500 {360}	19000 {1900}	58 {5.9}	1.0	0.02	±0.45	46	6.8×10^{-6}	0.27
NES100S	10 {1.0}	15000	8~15		34	15.7	2.6	11.5	29.5	44	6400 {650}	30000 {3000}	65 {6.6}	1.0	0.02	±0.55	78	15.9×10^{-6}	0.64
NES250S	25 {2.6}	10000	10~20		43	20	3	14.4	38	55	12000 {1200}	44000 {4500}	21 {2.1}	1.0	0.02	±0.70	150	45.6×10^{-6}	1.82
NES800S	80 {8.2}	10000	14~24		51.7	23.5	4.7	16.9	46	64	25000 {2600}	78000 {8000}	52 {5.3}	1.0	0.02	±0.70	250	114×10^{-6}	4.56
NES1300S	130 {13}	10000	19~32		68.2	31.5	5.2	22.6	54	82	37000 {3800}	220000 {22000}	65 {6.6}	1.0	0.02	±0.90	490	367×10^{-6}	14.7
NES2000S	200 {20.4}	9000	25~35		66.6	30.5	5.6	21.6	69	92	71000 {7200}	540000 {55100}	67 {6.8}	1.0	0.02	±0.70	700	670×10^{-6}	26.8
NES3000S	300 {30.6}	8000	32~42		70	31.2	7.6	21	79	104	81000 {8300}	610000 {62200}	85 {8.6}	1.0	0.02	±0.90	980	1260×10^{-6}	50.4

Notes 1. The maximum rotation speed does not take dynamic balance into consideration.
2.The weight, moment of inertia, and GD² are the values at maximum shaft bore diameter.
3.Each allowable misalignment is based on the assumption that both of the other two misalignment values are 0 (zero).
4.The columns with values in the table on the bottom of the previous page show the standard shaft bore diameters.
5.Recommended tolerance for mounting shaft is h7. Note, however, for the ø35 shaft bore diameter, the recommended servo motor shaft bore tolerance is (+0.010 to 0).

Spacer Type Coupling: Straight Hub x Straight Hub

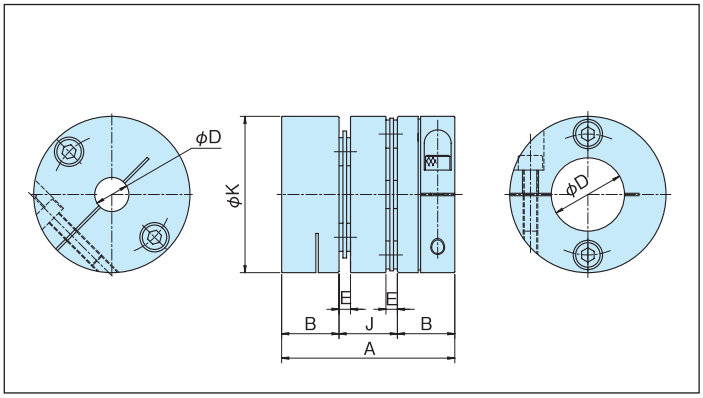

Reference Number System (Example)

NES 30 W – N10 C X N12 C

- NES: Series
- 30: Size
- W: Spacer Type
- N10 C: Shaft Bore Diameter (mm) (ø6.35 and ø9.525 are shown as 6.3 and 9.5 respectively.)
- X: Clamp Shaft Bore
- N12 C: N: Straight hub

∗Indicate the smaller bore diameter first.

Model No.	Allowable Torque N·m {kgf·m}	Note 1) Max. Rotation speed r/min	Notes 4) Shaft Bore Diameter φD mm: Range of Shaft Bore Diameters	Standard Shaft Bore Diameter	Dimensions mm: A	B	E	φK	J	Through Shaft Allowable Max. Diameter	Torsional Stiffness N·m/rad {kgf·m/rad}: Whole Coupling	Disk only	Axial Spring Constant N/mm {kgf/mm}	Note 3) Allowable Misalignment: Angular Misalignment deg	Parallel Misalignment mm	Axial Displacement mm	Note 2) Weight g	Note 2) Moment of Inertia kg·m²	Note 2) GD² {kgf·cm²}
NES07W	0.7 {0.07}	18000	4~ 6	Refer to the table of Standard Shaft Bore Diameter (in the table below).	18.9	7.5	0.85	16	3.9	6	210 {21}	600 {61}	87 {8.9}	1.4	0.05	±0.24	9	0.32×10⁻⁶	0.01
NES15W	1.5 {0.15}	18000	4~ 8		26	8.9	1.1	19	8.2	6.5	420 {43}	1300 {130}	47 {4.8}	2.0	0.12	±0.36	17	0.90×10⁻⁶	0.04
NES20W	2.0 {0.20}	18000	5~10		31.7	11	1.1	24	9.7	10	1000 {100}	2800 {290}	43 {4.4}	2.0	0.15	±0.60	32	2.7 ×10⁻⁶	0.11
NES30W	3.0 {0.31}	18000	6~16		35.6	11.8	1.5	31	12	13	1600 {160}	4200 {430}	24 {2.4}	2.0	0.18	±0.80	53	8.0 ×10⁻⁶	0.32
NES50W	5.0 {0.51}	18000	6~16		40	12.5	1.5	34	15	13	2100 {210}	6500 {660}	25 {2.6}	2.0	0.24	±0.80	76	14 ×10⁻⁶	0.54
NES70W	7.0 {0.71}	18000	8~20		45.5	15	1.75	37	15.5	16	4600 {470}	9500 {970}	29 {3.0}	2.0	0.24	±0.90	97	21 ×10⁻⁶	0.84
NES100W	10 {1.0}	15000	8~22		48.1	15.7	2.6	44	16.7	17	6200 {630}	15000 {1500}	33 {3.4}	2.0	0.25	±1.1	160	47 ×10⁻⁶	1.9
NES250W	25 {2.6}	10000	10~25		59	20	3	55	19	22	11000 {1100}	22000 {2200}	11 {1.1}	2.0	0.28	±1.4	320	140 ×10⁻⁶	5.7
NES800W	80 {8.2}	10000	14~30		70.9	23.5	4.7	64	23.9	25	23000 {2300}	39000 {4000}	27 {2.8}	2.0	0.34	±1.4	510	320 ×10⁻⁶	13
NES1300W	130 {13}	10000	20~35		97.9	31.5	5.2	82	34.9	36	46000 {4700}	110000 {11000}	33 {3.4}	2.0	0.52	±1.8	1200	1100 ×10⁻⁶	45
NES2000W	200 {20.4}	9000	25~45		98.6	30.5	5.6	92	37.6	45	60000 {6120}	270000 {27600}	43 {4.4}	2.0	0.56	±1.4	1300	1700 ×10⁻⁶	68
NES3000W	300 {30.6}	8000	35~50		102	31.2	7.6	104	39.2	50	68000 {6940}	300000 {30600}	64 {6.5}	2.0	0.55	±1.8	1800	2960 ×10⁻⁶	118

Notes 1. The maximum rotation speed does not take dynamic balance into consideration.
2.The weight, moment of inertia, and GD² are the values at maximum shaft bore diameter.
3.Each allowable misalignment is based on the assumption that both of the other two misalignment values are 0 (zero).
4.The columns with values in the table below are the standard shaft bore diameters. The figures indicate transmission torques.
5.Recommended tolerance for mounting shaft is h7. Note, however, for the ø35 shaft bore diameter, the recommended servo motor shaft bore tolerance is (+0.010 to 0).

Transmission Torque by Standard Shaft Diameter and Shaft Bore Diameter (N·m)

Model No.	Bolt Size	Tightening Torque N·m {kgf·m}	Standard Shaft Bore Diameter (mm): 4	5	6	6.35	7	8	9	9.525	10	11	12	14	15	16	17	18	19	20	22	24	25	28	30	32	35	38	40	42	45	48	50
NES07	M2	0.50{0.04}	0.7	0.7	0.7																											
NES15	M2	0.50{0.04}	1.3	1.5	1.5	1.5	1.5	1.5																								
NES20	M2.5	1.0{0.10}		2	2	2	2	2	2	2	2																					
NES30	M2.5	1.0{0.10}			3	3	3	3	3	3	3	3	3	3	3	3																
NES50	M3	1.9{0.19}			5	5	5	5	5	5	5	5	5	5	5	5																
NES70	M3	1.9{0.19}						7	7	7	7	7	7	7	7	7	7	7	7	7												
NES100	M4	3.8{0.39}						10	10	10	10	10	10	10	10	10	10	10	10	10	10											
NES250	M4	3.8{0.39}									25	25	25	25	25	25	25	25	25	25	25	25	25									
NES800	M6	12{1.22}												80	80	80	80	80	80	80	80	80	80	80	80							
NES1300	M6	12{1.22}																		107	118	130	130	130	130	130	130					
NES2000	M8	30{3.1}																					200	200	200	200	200	200	200	200	200	
NES3000	M8	30{3.1}																									300	300	300	300	300	300	300

TRANSMISSION CAPACITY / DIMENSIONS

NES

Single Type Coupling: Straight Hub x Straight Hub

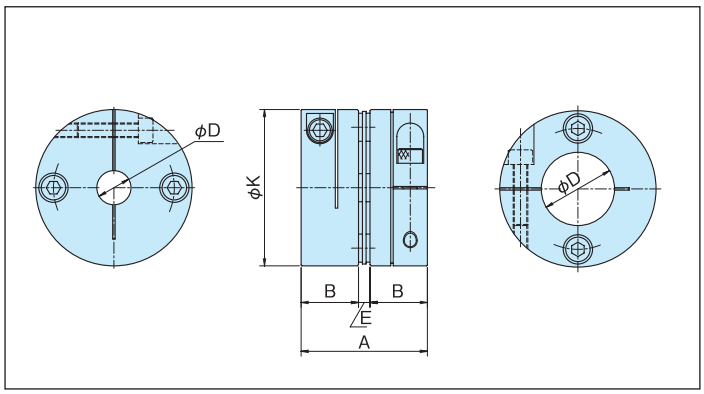

Reference Number System (Example)

NES 30 S – N10 C X N12 C

- NES: Series
- 30: Size
- S: Single Type
- N10: Shaft Bore Diameter (mm) (ø6.35 and ø9.525 are shown as 6.3 and 9.5 respectively.)
- C: Clamp Shaft Bore
- N12: N: Straight hub
- C: Clamp Shaft Bore

∗ Indicate the smaller bore diameter first.

Model No.	Allowable Torque N·m {kgf·m}	Note 1) Max. Rotation speed r/min	Notes 4) Shaft Bore Diameter φD mm: Range of Shaft Bore Diameters	Standard Shaft Bore Diameter	Dimensions mm: A	B	E	φK	Torsional Stiffness N·m/rad {kgf·m/rad}: Whole Coupling	Disk only	Axial Spring Constant N/mm {kgf/mm}	Note 3) Allowable Misalignment: Angular Misalignment deg	Parallel Misalignment mm	Axial Displacement mm	Note 2) Weight g	Note 2) Moment of Inertia kg·m²	Note 2) GD² {kgf·cm²}
NES07S	0.7 {0.07}	18000	4～ 6	Refer to the table of Standard Shaft Bore Diameter (on previous page).	15.85	7.5	0.85	16	430 {44}	1200 {120}	170 {17}	0.7	0.02	±0.12	7	0.26×10⁻⁶	0.01
NES15S	1.5 {0.15}	18000	4～ 8		18.4	8.9	1.1	19	780 {80}	2600 {270}	93 {9.5}	1.0	0.02	±0.18	12	0.63×10⁻⁶	0.03
NES20S	2.0 {0.20}	18000	5～10		23.1	11	1.1	24	1800 {180}	5600 {570}	86 {8.8}	1.0	0.02	±0.30	23	1.9 ×10⁻⁶	0.08
NES30S	3.0 {0.31}	18000	6～16		25.1	11.8	1.5	31	3700 {380}	8400 {860}	48 {4.9}	1.0	0.02	±0.40	37	5.5 ×10⁻⁶	0.22
NES50S	5.0 {0.51}	18000	6～16		26.5	12.5	1.5	34	4500 {460}	13000 {1300}	51 {5.2}	1.0	0.02	±0.40	49	8.8 ×10⁻⁶	0.35
NES70S	7.0 {0.71}	18000	8～20		31.75	15	1.75	37	7400 {760}	19000 {1900}	58 {5.9}	1.0	0.02	±0.45	66	14 ×10⁻⁶	0.57
NES100S	10 {1.0}	15000	8～22		34	15.7	2.6	44	10000 {1000}	30000 {3000}	65 {6.6}	1.0	0.02	±0.55	110	32 ×10⁻⁶	1.3
NES250S	25 {2.6}	10000	10～25		43	20	3	55	19000 {1900}	44000 {4500}	21 {2.1}	1.0	0.02	±0.70	220	100 ×10⁻⁶	4.1
NES800S	80 {8.2}	10000	14～30		51.7	23.5	4.7	64	39000 {4000}	78000 {8000}	52 {5.3}	1.0	0.02	±0.70	350	220 ×10⁻⁶	8.7
NES1300S	130 {13}	10000	20～35		68.2	31.5	5.2	82	77000 {7900}	220000 {22000}	65 {6.6}	1.0	0.02	±0.90	790	780 ×10⁻⁶	31
NES2000S	200 {20.4}	9000	25～45		66.6	30.5	5.6	92	110000 {11200}	540000 {55100}	67 {6.8}	1.0	0.02	±0.70	880	1140 ×10⁻⁶	46
NES3000S	300 {30.6}	8000	35～50		70	31.2	7.6	104	150000 {15300}	610000 {62200}	85 {8.6}	1.0	0.02	±0.90	1200	1990 ×10⁻⁶	80

Notes 1. The maximum rotation speed does not take dynamic balance into consideration.
2.The weight, moment of inertia, and GD² are the values at maximum shaft bore diameter.
3.Each allowable misalignment is based on the assumption that both of the other two misalignment values are 0 (zero).
4.The columns with values in the table on the bottom of the previous page show the standard shaft bore diameters.
5.Recommended tolerance for mounting shaft is h7. Note, however, for the ø35 shaft bore diameter, the recommended servo motor shaft bore tolerance is (+0.010 to 0).

Spacer Type Coupling: Low Inertia Hub x Straight Hub

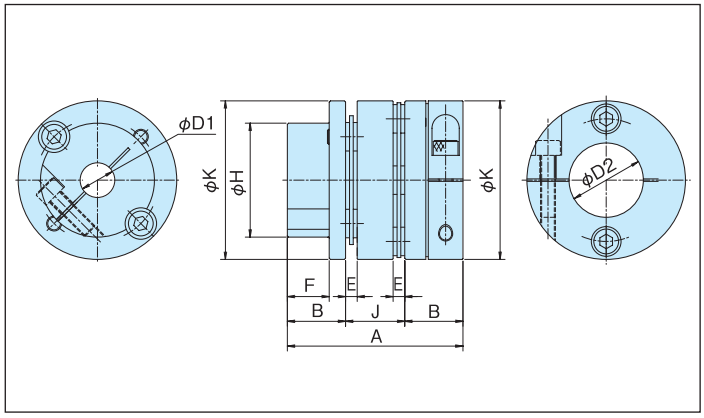

Reference Number System (Example)

NES 100 W – D 8 C X N 20 C

- NES: Series
- 100: Size
- W: Spacer Type
- D 8: Shaft Bore Diameter (mm) (ø6.35 and ø9.525 are shown as 6.3 and 9.5 respectively.)
- C: Type of Hub — D: Low inertia hub, N: Straight hub
- X: Clamp Shaft Bore

∗ Indicate the smaller bore diameter first.

Model No.	Allowable Torque N·m {kgf·m}	Note 1) Max. Rotation speed r/min	Notes 4) Shaft Bore Diameter φD1 mm: Range of Shaft Bore Diameters	Notes 4) Shaft Bore Diameter φD1 mm: Standard Shaft Bore Diameter	Notes 4) Shaft Bore Diameter φD2 mm: Range of Shaft Bore Diameters	Notes 4) Shaft Bore Diameter φD2 mm: Standard Shaft Bore Diameter	Dimensions mm: A	B	E	F	H	φK	J	Through Shaft Allowable Max. Diameter	Torsional Stiffness N·m/rad {kgf·m/rad} Disk only	Axial Spring Constant N/mm {kgf/mm}	Note 3) Allowable Misalignment: Angular Misalignment deg	Parallel Misalignment mm	Axial Displacement mm	Note 2) Weight g	Note 2) Moment of Inertia kg·m²	Note 2) GD² {kgf·cm²}
NES50W	5.0 {0.51}	18000	5~10	Refer to the table of Standard Shaft Bore Diameter (in the table below).	6~16	Refer to the table of Standard Shaft Bore Diameter (in the table below).	37	12.5	1.5	9.3	21.5	34	12	13	6500 {660}	25 {2.6}	2.0	0.18	±0.80	59	9.2 ×10⁻⁶	0.37
NES70W	7.0 {0.71}	18000	8~14		8~20		45.5	15	1.75	11.8	26	37	15.5	16	9500 {970}	29 {3.0}	2.0	0.24	±0.90	85	16.1 ×10⁻⁶	0.64
NES100W	10 {1.0}	15000	8~15		8~22		48.1	15.7	2.6	11.5	29.5	44	16.7	17	15000 {1500}	33 {3.4}	2.0	0.25	±1.1	140	35.8 ×10⁻⁶	1.43
NES250W	25 {2.6}	10000	10~20		10~25		59	20	3	14.4	38	55	19	22	22000 {2200}	11 {1.1}	2.0	0.28	±1.4	260	105 ×10⁻⁶	4.20
NES800W	80 {8.2}	10000	14~24		14~30		70.9	23.5	4.7	16.9	46	64	23.9	25	39000 {4000}	27 {2.8}	2.0	0.34	±1.4	430	235 ×10⁻⁶	9.40
NES1300W	130 {13}	10000	19~32		20~35		97.9	31.5	5.2	22.6	54	82	34.9	36	110000 {11000}	33 {3.4}	2.0	0.52	±1.8	950	860 ×10⁻⁶	34.4
NES2000W	200 {20.4}	9000	25~35		25~45		98.6	30.5	5.6	21.6	69	92	37.6	45	270000 {27600}	43 {4.4}	2.0	0.56	±1.4	1230	1450 ×10⁻⁶	58.0
NES3000W	300 {30.6}	8000	32~42		35~50		101.6	31.2	7.6	21	79	104	39.2	50	300000 {30600}	64 {6.5}	2.0	0.55	±1.8	1700	2560 ×10⁻⁶	102

Notes 1. The maximum rotation speed does not take dynamic balance into consideration.
2.The weight, moment of inertia, and GD² are the values at maximum shaft bore diameter.
3.Each allowable misalignment is based on the assumption that both of the other two misalignment values are 0 (zero).
4.The columns with values in the table below are the standard shaft bore diameters. The figures indicate transmission torques.
5.Recommended tolerance for mounting shaft is h7. Note, however, for the ø35 shaft bore diameter, the recommended servo motor shaft bore tolerance is (+0.010 to 0).

Transmission Torque by Standard Shaft Diameter and Shaft Bore Diameter (N·m)

Low Inertia Hub (φD1)

Model No.	Bolt Size	Tightening Torque N·m {kgf·m}	Standard Shaft Bore Diameter(φD1) (mm) 5	6	6.35	7	8	9	9.525	10	11	12	14	15	16	17	18	19	20	22	24	25	28	30	32	35	38	40	42
NES50	M3	1.9{0.19}	5	5	5	5	5	5	5	5																			
NES70	M3	1.9{0.19}					7	7	7	7	7	7	7																
NES100	M4	3.8{0.39}					10	10	10	10	10	10	10	10															
NES250	M4	3.8{0.39}								25	25	25	25	25	25	25	25	25	25										
NES800	M6	12{1.22}											80	80	80	80	80	80	80	80	80								
NES1300	M6	12{1.22}																105	105	110	115	120	125	130	130				
NES2000	M8	30{3.1}																				200	200	200	200	200			
NES3000	M8	30{3.1}																							235	245	255	260	265

TRANSMISSION CAPACITY / DIMENSIONS

NES

Single Type Coupling: Low Inertia Hub x Straight Hub

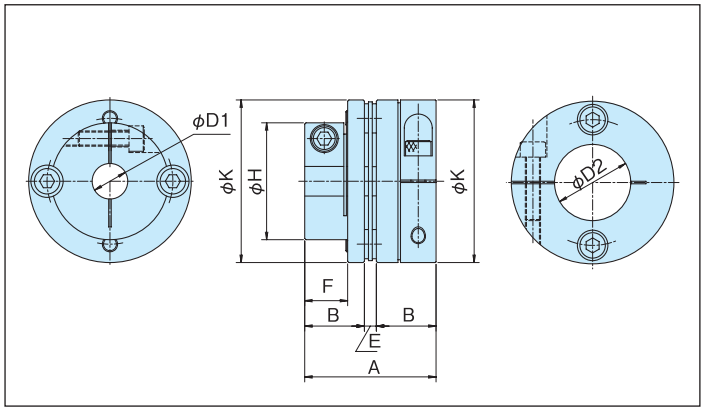

Reference Number System (Example)

NES 1300 S – D 22 C X N 30 C

- NES: Series
- 1300: Size
- S: Spacer Type
- D 22: Shaft Bore Diameter (mm) (ø6.35 and ø9.525 are shown as 6.3 and 9.5 respectively.)
- C X N: Type of Hub (D: Low inertia hub, N: Straight hub)
- 30 C: Clamp Shaft Bore

* Indicate the smaller bore diameter first.

Model No.	Allowable Torque N·m {kgf·m}	Note 1) Max. Rotation speed r/min	Notes 4) Shaft Bore Diameter φD1 mm: Range of Shaft Bore Diameters	Notes 4) Shaft Bore Diameter φD1 mm: Standard Shaft Bore Diameter	Notes 4) Shaft Bore Diameter φD2 mm: Range of Shaft Bore Diameters	Notes 4) Shaft Bore Diameter φD2 mm: Standard Shaft Bore Diameter	Dimensions mm: A	B	E	F	H	φK	Torsional Stiffness N·m/rad {kgf·m/rad} Disk only	Axial Spring Constant N/mm {kgf/mm}	Note 3) Allowable Misalignment: Angular Misalignment deg	Parallel Misalignment mm	Axial Displacement mm	Note 2) Weight g	Note 2) Moment of Inertia kg·m²	Note 2) GD² {kgf·cm²}
NES50S	5.0 {0.51}	18000	5~10	Refer to the table of Standard Shaft Bore Diameter (in the table below).	6~16	Refer to the table of Standard Shaft Bore Diameter (in the table below).	26.5	12.5	1.5	9.3	21.5	34	13000 {1300}	51 {5.2}	1.0	0.02	±0.40	41	6 ×10⁻⁶	0.24
NES70S	7.0 {0.71}	18000	8~14		8~20		31.75	15	1.75	11.8	26	37	19000 {1900}	58 {5.9}	1.0	0.02	±0.45	55	10.1 ×10⁻⁶	0.40
NES100S	10 {1.0}	15000	8~15		8~22		34	15.7	2.6	11.5	29.5	44	30000 {3000}	65 {6.6}	1.0	0.02	±0.55	91	22.9 ×10⁻⁶	0.92
NES250S	25 {2.6}	10000	10~20		10~25		43	20	3	14.4	38	55	44000 {4500}	21 {2.1}	1.0	0.02	±0.70	180	70.7 ×10⁻⁶	2.83
NES800S	80 {8.2}	10000	14~24		14~30		51.7	23.5	4.7	16.9	46	64	78000 {8000}	52 {5.3}	1.0	0.02	±0.70	300	160 ×10⁻⁶	6.40
NES1300S	130 {13}	10000	19~32		20~35		68.2	31.5	5.2	22.6	54	82	220000 {22000}	65 {6.6}	1.0	0.02	±0.90	630	556 ×10⁻⁶	22.2
NES2000S	200 {20.4}	9000	25~35		25~45		66.6	30.5	5.6	21.6	69	92	540000 {55100}	67 {6.8}	1.0	0.02	±0.70	790	887 ×10⁻⁶	35.5
NES3000S	300 {30.6}	8000	32~42		35~50		70	31.2	7.6	21	79	104	610000 {62200}	85 {8.6}	1.0	0.02	±0.90	1100	1600 ×10⁻⁶	64.0

Notes 1. The maximum rotation speed does not take dynamic balance into consideration.
2.The weight, moment of inertia, and GD² are the values at maximum shaft bore diameter.
3.Each allowable misalignment is based on the assumption that both of the other two misalignment values are 0 (zero).
4.The columns with values in the table below are the standard shaft bore diameters. The figures indicate transmission torques.
5.Recommended tolerance for mounting shaft is h7. Note, however, for the ø35 shaft bore diameter, the recommended servo motor shaft bore tolerance is (+0.010 to 0).

Transmission Torque by Standard Shaft Diameter and Shaft Bore Diameter (N·m)

Straight Hub (φD2)

Model No.	Bolt Size	Tightening Torque N·m {kgf·m}	Standard Shaft Bore Diameter(φD2) (mm)																													
			6	6.35	7	8	9	9.525	10	11	12	14	15	16	17	18	19	20	22	24	25	28	30	32	35	38	40	42	45	48	50
NES50	M3	1.9{0.19}	5	5	5	5	5	5	5	5	5	5	5	5																		
NES70	M3	1.9{0.19}				7	7	7	7	7	7	7	7	7	7	7	7	7														
NES100	M4	3.8{0.39}				10	10	10	10	10	10	10	10	10	10	10	10	10	10													
NES250	M4	3.8{0.39}							25	25	25	25	25	25	25	25	25	25	25	25	25											
NES800	M6	12{1.22}										80	80	80	80	80	80	80	80	80	80	80	80									
NES1300	M6	12{1.22}																107	118	130	130	130	130	130	130							
NES2000	M8	30{3.1}																			200	200	200	200	200	200	200	200	200			
NES3000	M8	30{3.1}																							300	300	300	300	300	300	300	300

NEF Series: Spacer Type Couplings

The NEF Series Spacer Type coupling incorporates two sets of disk kits, enabling absorption of all misalignments.
This type of coupling provides the widest application range.

NEF02W - N□□ X N□□

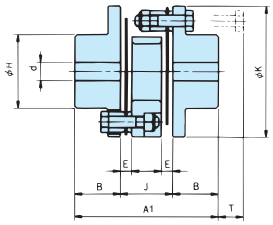

Note: The spacer shape is different from that of other sizes. The standard hub and extended-diameter hub are in stock. Contact us for long hubs.

Standard Hub×Standard Hub NEF□□W - N□□ X N□□

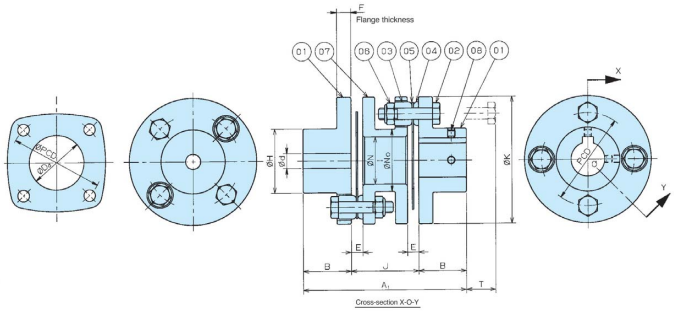

① Standard hub ② Reamer bolt ③ Washer A ④ Washer B
⑤ Disk ⑥ U-nut ⑦ Spacer ⑧ Set screw

Extended-Dia. Hub×Standard Hub NEF□□W - K□□ X N□□

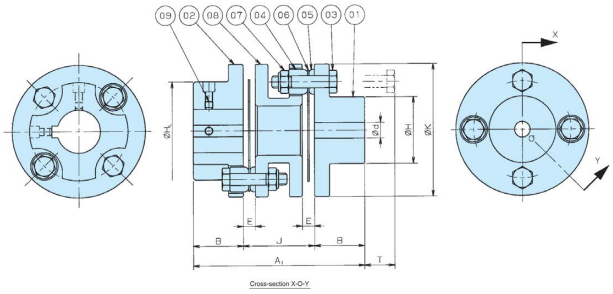

① Standard hub ② Extended-dia. hub ③ Reamer bolt ④ Washer A
⑤ Washer B ⑥ Disk ⑦ U-nut ⑧ Spacer ⑨ Set screw

Long Hub×Standard Hub NEF□□W - L□□ X N□□

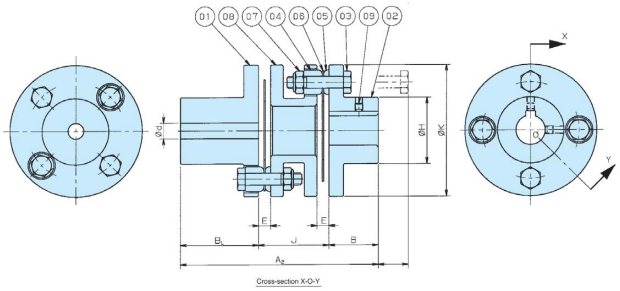

① Long hub ② Standard hub ③ Reamer bolt ④ Washer A
⑤ Washer B ⑥ Disk ⑦ U-nut ⑧ Spacer ⑨ Set screw

Extended-Dia. Hub×Extended-Dia. Hub NEF□□W - K□□ X K□□

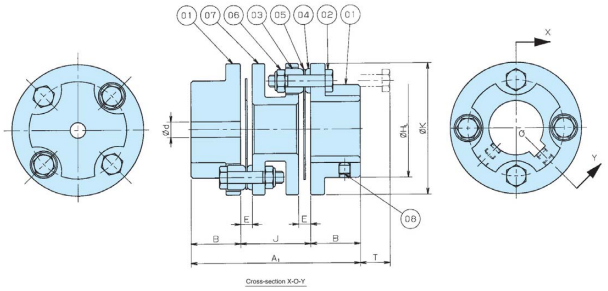

① Extended-dia. hub ② Reamer bolt ③ Washer A ④ Washer B
⑤ Disk ⑥ U-nut ⑦ Spacer ⑧ Set screw

Extended-Dia. Hub×Long Hub NEF□□W - K□□ X L□□

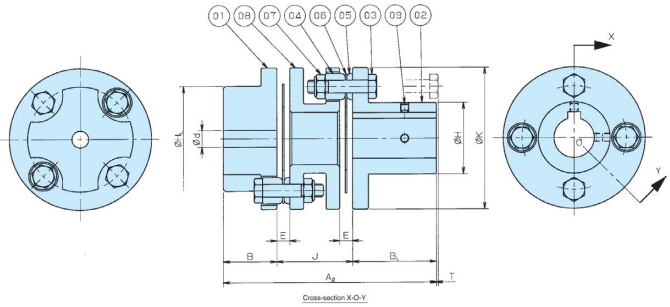

① Extended-dia. hub ② Long hub ③ Reamer bolt ④ Washer A
⑤ Washer B ⑥ Disk ⑦ U-nut ⑧ Spacer ⑨ Set screw

Long Hub×Long Hub NEF□□W - L□□ X L□□

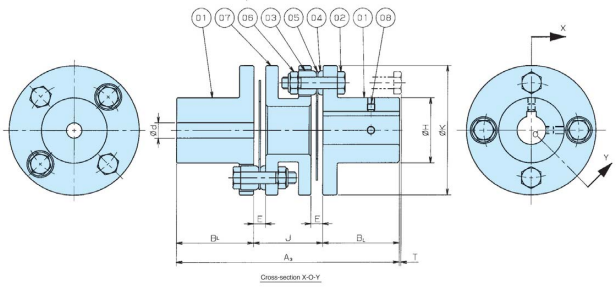

① Long hub ② Reamer bolt ③ Washer A ④ Washer B
⑤ Disk ⑥ U-nut ⑦ Spacer ⑧ Set screw

TRANSMISSION CAPACITY / DIMENSIONS

NEF-W

Spacer Type

Unit: mm

Model No.	Allowable Torque N·m{kgf·m}	Max. Rotation Speed r/min	Rough Bore d	Keyway Standard Stock Bore Dia. Range	Keyway Max. Shaft Dia. φ			Torsional Stiffness N·m/rad{kgf·m/rad}	Axial Spring Constant N/mm{kgf/mm}	PCD	A_1	A_2	A_3
					Standard Hub	Long Hub	Extended-Dia. Hub						
NEF02W	19.6{ 2}	20000	8	14-25	20	–	25	1.00×10^4\{ 0.10$\times10^4$\}	34.3{ 3.5}	44	63	—	—
NEF04W	39.2{ 4}	20000	8	11-22	23	23	29	1.18×10^4\{ 0.12$\times10^4$\}	20.6{ 2.1}	49.5	86.8	101.4	116
NEF10W	98 { 10}	20000	10	12-30	32	32	40	3.92×10^4\{ 0.4 $\times10^4$\}	29.4{ 3 }	63	89.8	104.4	119
NEF18W	176 { 18}	18000	12	14-35	35	35	42	7.84×10^4\{ 0.8 $\times10^4$\}	63.7{ 6.5}	71	104.4	120.7	137
NEF25W	245 { 25}	15000	15	18-42	42	42	48	12.7 $\times10^4$\{ 1.3 $\times10^4$\}	78.4{ 8 }	82	120	136.5	153
NEF45W	441 { 45}	13000	15	25-50	50	50	60	21.6 $\times10^4$\{ 2.2 $\times10^4$\}	109 {11.1}	96	144.2	163.1	182
NEF80W	784 { 80}	12000	15	30-60	60	60	70	39.2 $\times10^4$\{ 4.0 $\times10^4$\}	153 {15.6}	111	164.6	186.8	209
NEF130W	1270 {130}	10000	25	35-70	74	74	80	73.5 $\times10^4$\{ 7.5 $\times10^4$\}	177 {18.1}	134	192.4	220.2	248
NEF210W	2060 {210}	8000	25	–	83	83	90	11.3 $\times10^5$\{11.5 $\times10^4$\}	225 {23 }	153	216	272.5	329
NEF340W	3330 {340}	7500	45	–	95	95	110	16.2 $\times10^5$\{16.5 $\times10^4$\}	235 {24 }	172	249.4	313.2	377
NEF540W	5290 {540}	3400	50	–	109	109	120	21.4 $\times10^5$\{21.8 $\times10^4$\}	274 {28 }	198	286.8	337.9	389
NEF700W	6860 {700}	3100	50	–	118	118	130	29.1 $\times10^5$\{29.7 $\times10^4$\}	294 {30 }	218	337.2	385.6	434

Model No.	B	B_L	E	F	H	H_L	J	K	D_d	N	No	Ni	T	T'	Allowable Misalignment			Weight kg	Moment of Inertia kg·m²	GD² {kgf·cm²}
															Angular Misalignment deg	Parallel Misalignment mm	Axial Displacement (Note)			
NEF02W	20	–	4.9	5.5	32	45	23	57	21	24	–	24	11	–	2	0.3	±1.6	0.45	1.66×10^{-4}	{ 6.64}
NEF04W	25.4	40	6.1	7.5	34	50	36	67.5	29	25	33	25	15.5	0.9	2	0.5	±1.6	1.1	5.3×10^{-4}	{ 21.4 }
NEF10W	25.4	40	6.6	7.5	46	66	39	81	37	37	46	37	16	1.4	2	0.55	±2.0	1.4	12×10^{-4}	{ 47 }
NEF18W	28.7	45	8.3	9	51	66	47	93	39	38	48	38	23	6.7	2	0.6	±2.4	2.3	25×10^{-4}	{ 100 }
NEF25W	33.5	50	11.2	9	61	78	53	104	45	47	58	47	21	4.5	2	0.7	±2.8	3.0	41×10^{-4}	{ 166 }
NEF45W	41.1	60	11.7	11.5	71	92	62	126	51	58	69	58	23	4.1	2	0.8	±3.2	6.6	110×10^{-4}	{ 440 }
NEF80W	47.8	70	11.7	14	84	104	69	143	61	71	81	71	29.5	7.3	2	0.9	±3.6	10.3	200×10^{-4}	{ 800 }
NEF130W	57.2	85	16.8	14	106	129	78	168	73	92	102	92	20	-7.8	2	1.0	±5.0	16.1	447×10^{-4}	{ 1787 }
NEF210W	63.5	120	17.0	16.5	118	147	89	194	84	103	114	103	32.5	-24	2	1.2	±5.4	23.2	931×10^{-4}	{ 3722 }
NEF340W	76.2	140	21.6	16.5	137	166	97	214	97	118	132	118	19.5	-44.3	2	1.3	±6.6	40.2	1478×10^{-4}	{ 5912 }
NEF540W	88.9	140	23.9	19	156	191	109	246	110	135	151	135	24.5	-15.6	2	1.4	±7.6	55	3014×10^{-4}	{12055 }
NEF700W	101.6	150	27.2	25.5	169	209	134	276	120	146	164	146	40	-8.4	2	1.8	±8.0	60	5972×10^{-4}	{23889 }

Notes
1. See p. 12 for extended diameter and long hub dimensions.
   With the long hub, the overall length is extended because dimension "B" is lengthened.
2. All stocked models are manufactured with pilot bores.
   Models NEF04W through NEF130W have been stocked with shaft bores machined within the above standard stock bore diameter range. (New JIS key, normal type)
3. The maximum rotation speed depends on the transmission capacity of the coupling.
   No balance adjustment has been conducted.
4. The weight, moment of inertia and GD² are the values at maximum bore diameter (keyway). For the extended-diameter hub and the long hub, add the individual values listed below.
5. Spacer lengths other than the standard length can be manufactured. For details on the Long Spacer Type, see p. 22.
6. The allowable axial displacement is based on the assumption that the angular misalignment is "0".
7. Check the key surface pressure in accordance with your operating conditions (see p. 23). The hub material is S45C.

Reference Number System (Example)

NEF18W - N30J X K40E

- Model No.
- Type
  - S: Single Type
  - W: Spacer Type
- Bore Diameter (Rough bore: R)
- Type of Hub
  - N: Standard Hub
  - K: Extended-dia. Hub
  - L: Long Hub
  - H: Taper-Lock Hub (See p. 31)
- Shaft Coupling Method
  - J: Keyway of new JIS normal type
  - E: Keyway of old JIS Type 2
  - C: Clamp (See p. 28)

*1: Indicate the smaller bore diameter first.
*2: Indicate the rough bore (symbol "R") first.

Increase in Weight, Moment of Inertia and GD² per Extended-Diameter Hub / Long Hub

Model No.	Extended-Dia. Hub			Long Hub		
	Weight kg	Moment of Inertia kg·m²	GD² {kgf·cm²}	Weight kg	Moment of Inertia kg·m²	GD² {kgf·cm²}
NEF02W	0.027	0.18×10^{-4}	{ 0.74}	–	–	–
NEF04W	0.046	0.34×10^{-4}	{ 1.35}	0.056	0.12×10^{-4}	{ 0.47}
NEF10W	0.15	1.3×10^{-4}	{ 5.18}	0.20	0.77×10^{-4}	{ 3.08}
NEF18W	0.042	1.1×10^{-4}	{ 4.19}	0.14	0.67×10^{-4}	{ 2.69}
NEF25W	0.13	3.0×10^{-4}	{ 11.3 }	0.20	1.3×10^{-4}	{ 5.41}
NEF45W	0.14	5.8×10^{-4}	{ 23.2 }	0.30	2.8×10^{-4}	{ 11.2 }
NEF80W	0.16	11×10^{-4}	{ 42.6 }	0.47	6.4×10^{-4}	{ 25.6 }
NEF130W	0.67	36×10^{-4}	{ 144 }	0.99	20×10^{-4}	{ 82.1 }
NEF210W	1.09	73×10^{-4}	{ 289 }	2.45	64×10^{-4}	{254 }
NEF340W	0.90	118×10^{-4}	{ 473 }	3.85	132×10^{-4}	{533 }
NEF540W	2.31	273×10^{-4}	{1089 }	3.91	178×10^{-4}	{710 }
NEF700W	2.91	431×10^{-4}	{1724 }	4.41	236×10^{-4}	{929 }

Long Spacer Type

The NEF Series Long Spacer Type of coupling enables the use of a floating shaft when there is some distance between devices. Depending on the spacer length, the Long Spacer Type of coupling can also absorb a large amount of eccentricity. This coupling is suitable for line shaft drives to miter gearboxes.

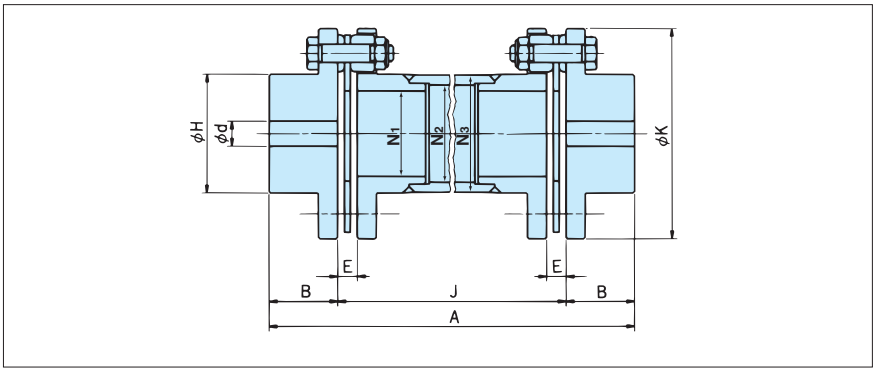

Torsional Stiffness Calculation for Vertical Long Spacer Type

If dimension "J" for each coupling size exceeds the value listed in the following table when a Long Spacer Type is installed vertically, a thrust supporter is required as shown on the right.

Unit: mm

Model No.	Dimension "J"	Model No.	Dimension "J"	Model No.	Dimension "J"
NEF04W	319	**NEF130W**	1910	**NEH14W**	1767
NEF10W	408	**NEF210W**	1924	**NEH20W**	1277
NEF18W	1171	**NEF340W**	2143	**NEH30W**	1747
NEF25W	1429	**NEF540W**	1542	**NEH41W**	1355
NEF45W	1386	**NEF700W**	1463		
NEF80W	1505	**NEH09W**	1153		

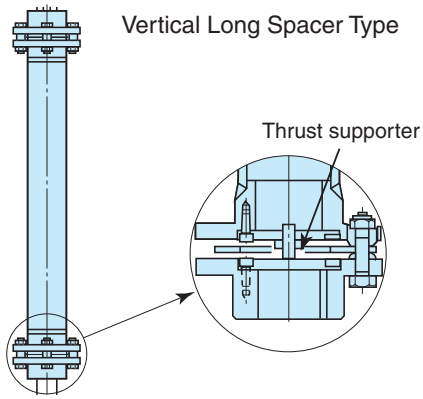

Formula for Torsional Stiffness Calculation of Vertical Long Spacer Type

Use the following formula to calculate the torsional stiffness of vertical Long Spacer Type coupling.

$$\frac{T \times 10^4}{(J - J_1) \cdot K_1 + K_2}$$

Unit: N · m/rad {kgf · m/rad}

Model No.	J_1	K_1	K_2
NEF04W	63	0.0949	32.0
NEF10W	64	0.0857	22.2
NEF18W	74	0.1152	22.5
NEF25W	89.4	0.0856	19.2
NEF45W	105.6	0.0656	20.0
NEF80W	119	0.0579	20.0
NEF130W	148	0.0436	17.3
NEF210W	161	0.0413	18.3
NEF340W	195.6	0.0434	20.6
NEF540W	225.6	0.0276	49.5
NEF700W	257.6	0.0286	47.1
NEH09W	258	0.0360	17.0
NEH14W	292	0.0560	16.3
NEH20W	330	0.0374	15.4
NEH30W	373	0.0374	14.3
NEH41W	390	0.0354	15.8

J: The dimension "J" given in the external drawing (distance between hub end faces) in mm.
T: The allowable torque given in the transmission capacity table in N·m{kgf·m}
Substitute the constants given in the above table for J_1, K_1 and K_2.

Approx. Weight of Long Spacer Type Coupling / Moment of Inertia and GD² Calculation Formulae

	Weight			Moment of Inertia, GD²			
Model No.	W_1	W_2	J_1	G_1	d_1	G_2	d_2
NEF04W	0.02	1.2	6.3	23	8.8	6	2.19
NEF10W	0.03	1.5	6.4	48	15.3	12	3.83
NEF18W	0.03	2.7	7.4	105	18.6	26	4.65
NEF25W	0.04	3.5	8.9	173	28.2	43	7.05
NEF45W	0.06	6.3	10.6	459	41.1	115	10.28
NEF80W	0.09	9.6	11.9	936	56.5	234	14.13
NEF130W	0.12	15.4	14.8	1948	94.3	487	23.59
NEF210W	0.16	22.5	16.1	4006	119.2	1001	29.79
NEF340W	0.19	29.9	19.6	6475	159.1	1619	39.78
NEF540W	0.36	46.1	22.6	13185	208.4	3246	52.09
NEF700W	0.38	69.5	25.8	25423	241.9	6356	60.47
NEH09W	0.44	64.1	25.8	22311	217.5	5578	54.38
NEH14W	0.44	72.4	29.2	25117	217.5	6279	54.38
NEH20W	0.65	110.7	33	49157	311.0	12289	77.74
NEH30W	0.75	150.9	37.3	85693	407.5	21423	101.87
NEH41W	0.95	197.9	39	132760	461.2	33190	115.3

Use the following formula to calculate the weight of the Long Spacer Type (at maximum bore diameter).

Unit: kg

$$\text{Weight} = W_1 \ (J - J_1) \ + W_2$$

J: Dimension "J" (distance between hub end faces) in mm.
Substitute the constants given in the above table for J_1, W_1, W_2, d_1, d_2, G_1 and G_2.

Use the following formulae to calculate the moment of inertia and GD² (at maximum bore diameter).

$$GD^2 = W_1 \times d_1 \ (J - J_1) \ + G_1$$

Unit: kgf · cm²

$$\text{Moment of inertia} = W_1 \times d_2 \ (J - J_1) \ + G_2$$

Unit: kg · cm²

* This formula applies to cases where dimension "J" exceeds "J_1" (Unit: cm).

TRANSMISSION CAPACITY / DIMENSIONS

NEF-W

Unit: mm

Model No.	Type (Number of Bolts)	Allowable Torque N·m{kgf·m}	Rough Bore d	Max. Bore Dia. (Keyway)	B	D_d	E	H	K	N_1	N_2	N_3	A	J	Allowable Misalignment: Angular Misalignment θ (deg)	Allowable Misalignment: Axial Displacement	Allowable Misalignment: Parallel Misalignment ε
NEF 04W	4	39.2{ 4}	8	23	25.4	29	6.1	34	67.5	17	27	32	2B + J	Required length (Max 6000)	2	±1.6	$(J-E)\times\sin\frac{1}{2}\theta$
NEF 10W	4	98 { 10}	10	32	25.4	37	6.6	46	81	26	36	42			2	±2.0	
NEF 18W	4	176 { 18}	12	35	28.7	39	8.3	51	93	30	40	46			2	±2.4	
NEF 25W	4	245 { 25}	15	42	33.5	45	11.2	61	104	38	50	56			2	±2.8	
NEF 45W	4	441 { 45}	15	50	41.1	51	11.7	71	126	48	60	68			2	±3.2	
NEF 80W	4	784 { 80}	15	60	47.8	61	11.7	84	143	61	70	80			2	±3.6	
NEF130W	4	1270 { 130}	25	74	57.2	73	16.8	106	168	76	92	102			2	±5.0	
NEF210W	4	2060 { 210}	25	83	63.5	84	17	118	194	88	103	115			2	±5.4	
NEF340W	4	3330 { 340}	45	95	76.2	97	21.6	137	214	106	120	132			2	±6.6	
NEF540W	4	5290 { 540}	50	109	88.9	110	23.9	156	246	125	134	154			2	±7.6	
NEF700W	4	6860 { 700}	70	118	101.6	120	27.2	169	276	136	145.2	165.2			2	±8.0	
NEH 09W	6	8820 { 900}	70	111	110	144	19	161	276	127	135	159			1.4	±3.2	
NEH 14W	8	13700 { 1400}	70	111	127	155	19	161	276	127	135	159			1	±2.1	
NEH 20W	8	19600 { 2000}	75	133	146	178	19	193	308	150	160.7	190.7			1	±2.4	
NEH 30W	8	29400 { 3000}	75	152	165	201	21.5	218	346	175	186.3	216.3			1	±2.8	
NEH 41W	8	40200 { 4100}	120	165	171	218	24	240	375	187	196	232			1	±2.8	
NEH 55W	8	53900 { 5500}	130	187	225	252	29.5	272	445	207	227.4	267.4		Required length (Max 4000)	1	±3.6	
NEH 70W	8	68600 { 7000}	150	205	247	275	31.3	297	470	209	230	280			1	±3.8	
NEH 90W	8	88200 { 9000}	150	231	278	304	32.0	334	511	247	273.9	323.9			1	±4.3	
NEH110W	8	108000 {11000}	190	254	305	343	32.5	364	556	277	305.6	355.6			1	±4.8	
NEH135W	8	132000 {13500}	190	263	317	350	34.0	382	587	304	331	381			1	±5.0	
NEH150W	8	147000 {15000}	210	275	331	368	34.5	399	629	304	331	381			1	±5.6	
NEH180W	8	176400 {18000}	210	289	347	380	35.5	419	654	319	344.6	406.4			1	±5.7	

Notes 1. All sizes are custom-made.
2. When placing an order, specify dimension "J". Consult with us if your required dimension is 6000 mm or greater.
3. When the Long Spacer Type is used at a high rotation speed, or if dimension "J" is extremely long, balance adjustment or a critical speed check may be required. See p. 9.
4. Contact us to vertically install a Long Spacer Type coupling.
5. The NEF10W, 18W and 25W Power-Lock Type couplings use the square hub for power lock. (See p. 12)
6. Refer to the following description and check the key surface pressure in accordance with your operating conditions. The hub material is S45C.

Installation (Example)

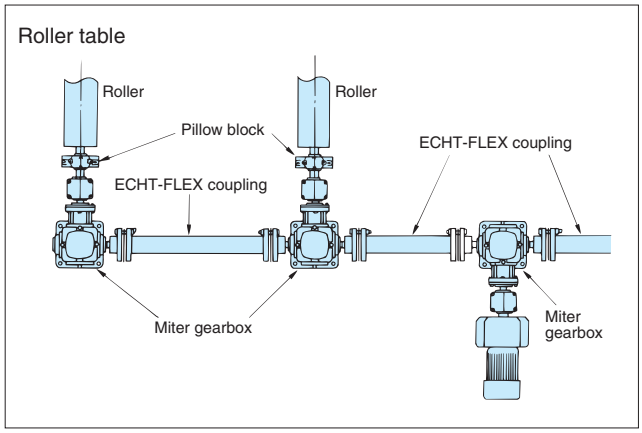

Reference Number System (Example)

NEF25W - N35JV X N40E - J1000

- Model No.
- Spacer Type
- Type of Hub
  - N: Standard Hub
  - K: Extended-Dia. Hub
  - L: Long Hub
  - H: Taper-Lock Hub (See p. 31)
- Indicates the lower-side bore diameter of the vertical Long Spacer Type coupling.
- Bore Diameter (Rough bore: R)
- Shaft Coupling Method
  - J: Keyway of new JIS normal type
  - E: Keyway of old JIS Type 2
  - C: Clamp (See p. 28)
- Dimension "J"
  - J: Long Spacer
  - JS: Long Spacer (standard length) (See p. 24)
  - JT: Single Plate Spacer (See p. 25)

*1: Indicate the smaller bore diameter first.
*2: Indicate the rough bore (symbol "R") first.

*[Reference] Key Surface Pressure Calculation

$$P=\frac{2000\times T}{D\times t\times B}\ (N/mm^2)$$

(T = Operating torque (N·m), D = Bore diameter (mm), t = Key height (mm), B = Effective key length (mm))

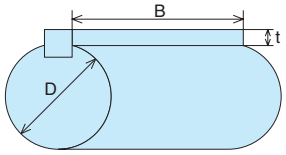

TRANSMISSION CAPACITY / DIMENSIONS

NEF-W

Long Spacer Type Couplings in Stock

Long spacers with specific dimensions are always in stock and available for quick delivery.

JS Type is designed with balance equivalent to G6.3/1800r/min.

List of Models in Stock

Model No.	"J": Distance between Hub End Faces															
	100	127	140	180	200	250	300	350	400	450	500	600	700	800	900	1000
NEF04W					●	●	●	●	●	●	●	●	●	●	●	●
NEF10W	○		○		●	●	●	●	●	●	●	●	●	●	●	●
NEF18W	○		○		●	●	●	●	●	●	●	●	●	●	●	●
NEF25W	○	○	○		●	●	●	●	●	●	●	●	●	●	●	●
NEF45W	○	○	○	○	○	○										
NEF80W		○	○	○	○	○										
NEF130W		○	○	○	○	○										
NEF210W			○	○	○											
NEF340W				○	○											

○ : JS Type ● : J Type

Constant Size Long Spacer Type

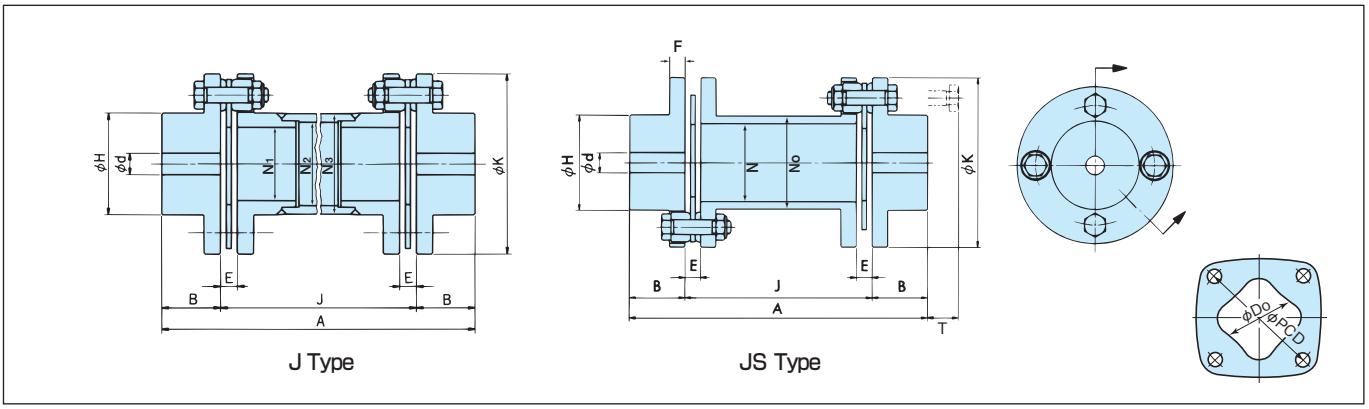

J Type JS Type

Table of Dimensions

Model No.	Type	J	Lower Bore d	Max. Shaft Bore Diameter (Keyway)	A	B	D_D	E	F	H	K	N	N_0	N_1	N_2	N_3	T	PCD
NEF04W	**J**	**200,250,300,350, 400,450,500,600, 700,800,900,1000**	8	23	2B+J	25.4	29	6.1	7.5	34	67.5	–	–	17	27	32	15.5	49.5
NEF10W	**JS**	**100,140**	10	32		25.4	37	6.6	7.5	46	81	37	46	–	–	–	16	63
	J	**200,250,300,350, 400,450,500,600, 700,800,900,1000**										–	–	26	36	42		
NEF18W	**JS**	**100,140**	12	35		28.7	39	8.3	9	51	93	38	48	–	–	–	23	71
	J	**200,250,300,350, 400,450,500,600, 700,800,900,1000**										–	–	30	40	46		
NEF25W	**JS**	**100,127,140**	15	42		33.5	45	11.2	9	61	104	47	58	–	–	–	21	82
	J	**200,250,300,350, 400,450,500,600, 700,800,900,1000**										–	–	38	50	56		
NEF45W	**JS**	**100,127,140,180, 200,250**	15	50		41.1	51	11.7	11.5	71	126	58	69	–	–	–	23	96
NEF80W	**JS**	**127,140,180,200, 250**	15	60		47.8	61	11.7	14	84	143	71	81	–	–	–	29.5	111
NEF130W	**JS**	**127,140,180,200, 250**	25	74		57.2	73	16.8	14	106	168	92	102	–	–	–	20	134
NEF210W	**JS**	**140,180,200**	25	83		63.5	84	17	16.5	118	194	103	114	–	–	–	32.5	153
NEF340W	**JS**	**180,200**	45	95		76.2	97	21.6	16.5	137	214	118	132	–	–	–	19.5	172

Using the Long Spacer Type Couplings in Stock

The following methods are available if the Long Spacer Type couplings in stock do not fit your equipment interface.

① When the required Long Spacer is slightly longer than the product in stock...
⇩
Use the long hub on both sides.

② When the required long spacer is slightly shorter than the product in stock...
⇩
Extend both shafts from the hubs.
The disk's bore diameter can be made to fit the maximum shaft diameter of either the standard or the long hub.

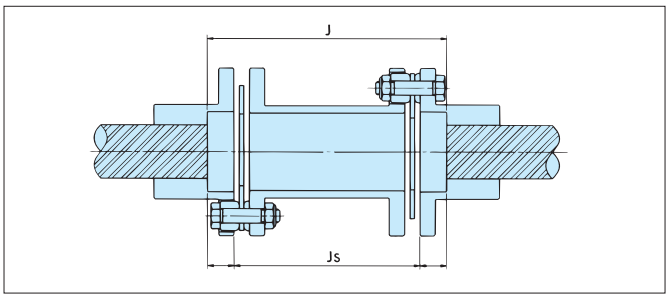

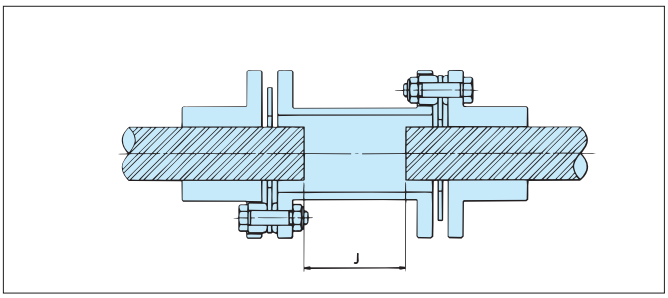

Single Plate Spacer Type

The NEF Series Single Plate Spacer Type reduces the distance between hub end faces (dimension "J") and is suitable for applications where the distance between shaft ends is short, or where the overall length must be shortened.

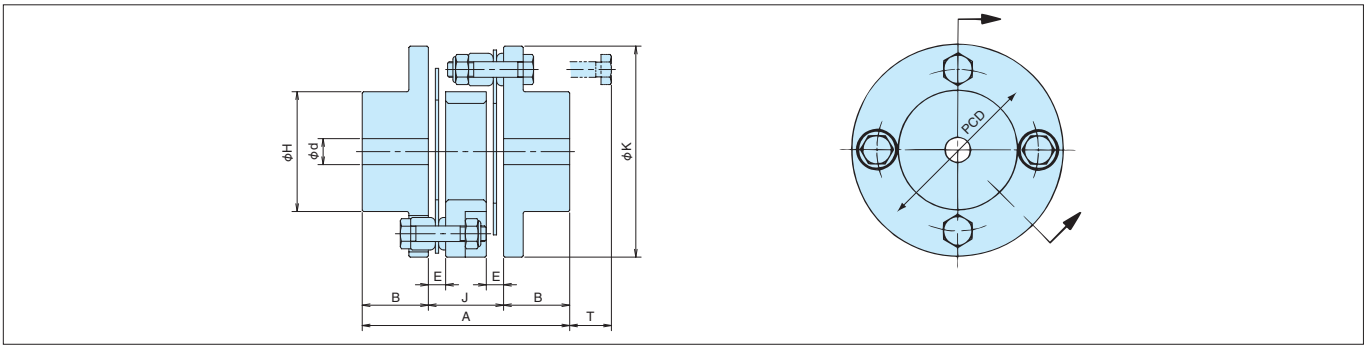

Unit: mm

Model No.	Allowable Torque N·m{kgf·m}	Rough bore d	Max. Bore Dia. (Keyway)	PCD	A	B	E	H	J	K	T
NEF04W	39.2 { 4}	8	23	49.5	79	25.4	6.1	34	28.2	67.5	15.5
NEF10W	98 { 10}	10	32	63	79.6	25.4	6.6	46	28.8	81	16
NEF18W	176 { 18}	12	35	71	94.3	28.7	8.3	51	36.9	93	23
NEF25W	245 { 25}	15	42	82	107.2	33.5	11.2	61	40.2	104	21
NEF45W	441 { 45}	15	50	96	128.5	41.1	11.7	71	46.3	126	23
NEF80W	784 { 80}	15	60	111	148.9	47.8	11.7	84	53.3	143	29.5
NEF130W	1270 {130}	25	74	134	174	57.2	16.8	106	59.6	168	20
NEF210W	2060 {210}	25	83	153	197.5	63.5	17	118	70.5	194	32.5
NEF340W	3330 {340}	45	95	172	228.8	76.2	21.6	137	76.4	214	19.5
NEF540W	5290 {540}	50	109	198	265.8	88.9	23.9	156	88	246	24.5
NEF700W	6860 {700}	50	118	218	309.2	101.6	27.2	169	106	276	40

Reference Number System (Example)

NEF25W - N35J X N40E - JT40.2

- NEF25W: Model No.
- NEF25W: Spacer Type
- N35J: Type of Hub
  - N: Standard Hub
  - K: Extended-Dia. Hub
  - L: Long Hub
  - H: Taper-Lock Hub (See p. 31)
- N35J: Bore Diameter (Rough bore: R)
- N40E: Shaft Coupling Method
  - J: Keyway of new JIS normal type
  - E: Keyway of old JIS Type 2
  - C: Clamp (See p. 28)
- JT40.2: Dimension "J"
  - JT : Single Plate Spacer

*1: Indicate the smaller bore diameter first.
*2: Indicate the rough bore (symbol "R") first.

NEF Series: Single Type Couplings

The NEF Series Single Type employs a single disk set, enabling absorption of angular eccentricity only. This type cannot absorb parallel misalignment, so it is recommended only for applications that enable precision centering of the servo motor for NC machining centers, NC wood machining tools, etc.
Under general centering conditions, use of the Spacer Type is recommended.

Standard Hub×Standard Hub NEF□□S - N□□ X N□□

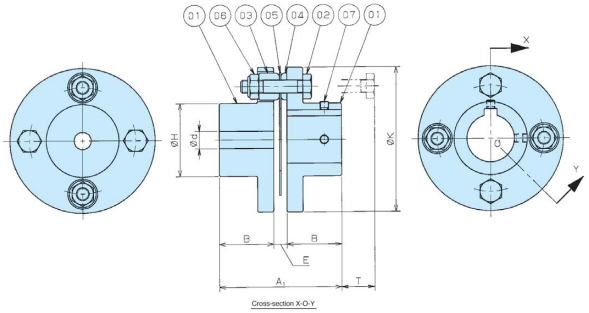

① Standard hub ② Reamer bolt ③ Washer A ④ Washer B
⑤ Disk ⑥ U-nut ⑦ Spacer

Extended-Dia. Hub×Standard Hub NEF□□S - K□□ X N□□

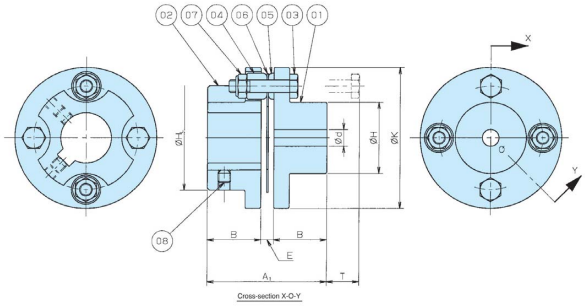

① Standard hub ② Extended-dia. hub ③ Reamer bolt ④ Washer A
⑤ Washer B ⑥ Disk ⑦ U-nut ⑧ Set screw

Long Hub×Standard Hub NEF□□S - L□□ X N□□

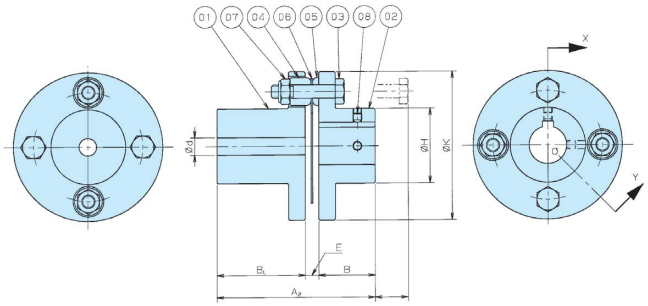

① Long hub ② Standard hub ③ Reamer bolt ④ Washer A
⑤ Washer B ⑥ Disk ⑦ U-nut ⑧ Set screw

Extended-Dia. Hub×Extended-Dia. Hub NEF□□S - K□□ X K□□

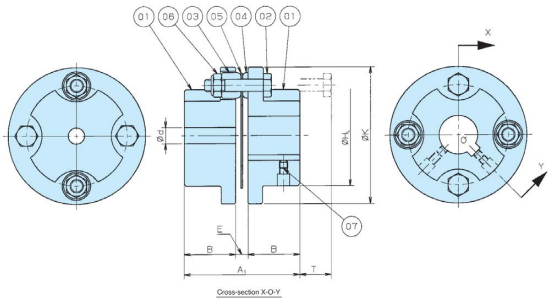

① Extended-dia. hub ② Reamer bolt ③ Washer A ④ Washer B
⑤ Disk ⑥ U-nut ⑦ Set screw

Extended-Dia. Hub×Long Hub NEF□□S - K□□ X L□□

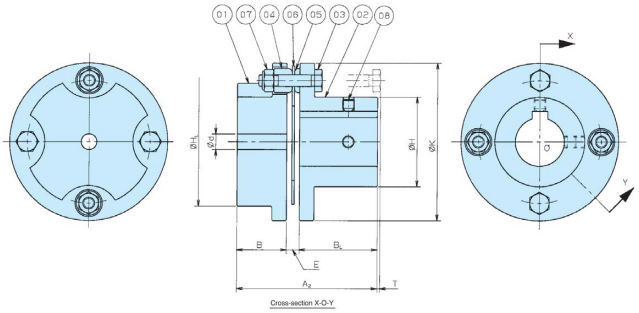

① Extended-dia. hub ② Long hub ③ Reamer bolt ④ Washer A
⑤ Washer B ⑥ Disk ⑦ U-nut ⑧ Set screw

Long Hub×Long Hub NEF□□S - L□□ X L□□

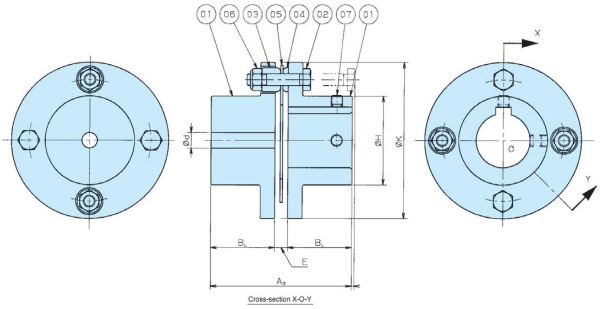

① Long hub ② Reamer bolt ③ Washer A ④ Washer B
⑤ Disk ⑥ U-nut ⑦ Set screw

TRANSMISSION CAPACITY / DIMENSIONS

NEF

Single

Unit: mm

Model No.	Allowable Torque N·m{kgf·m}	Max. Rotation Speed r/min	Rough Bore d	Standard Stock Bore Dia. Range	Keyway Max. Shaft Dia. ϕ			Torsional Stiffness N·m/rad{kgf·m/rad}	Axial Spring Constant N/mm{kgf/mm}	A_1	A_2
					Standard Hub	Long Hub	Extended-Dia. Hub				
NEF02S	19.6{ 2}	20000	8	14 ~ 25	20	–	25	1.96×10^4\{ 0.2 $\times10^4$\}	68.6{ 7.0}	44.9	–
NEF04S	39.2{ 4}	20000	8	11 ~ 22	23	23	29	2.45×10^4\{ 0.25×10^4\}	40.2{ 4.1}	56.9	71.5
NEF10S	98 { 10}	20000	10	12 ~ 30	32	32	40	8.82×10^4\{ 0.9 $\times10^4$\}	58.8{ 6 }	57.4	72
NEF18S	176 { 18}	18000	12	14 ~ 35	35	35	42	15.7 $\times10^4$\{ 1.6 $\times10^4$\}	127 {13 }	65.7	82
NEF25S	245 { 25}	15000	15	18 ~ 42	42	42	48	25.5 $\times10^4$\{ 2.6 $\times10^4$\}	157 {16 }	78.2	94.7
NEF45S	441 { 45}	13000	15	25 ~ 50	50	50	60	44.1 $\times10^4$\{ 4.5 $\times10^4$\}	219 {22.3}	93.9	112.8
NEF80S	784 { 80}	12000	15	30 ~ 60	60	60	70	78.4 $\times10^4$\{ 8 $\times10^4$\}	307 {31.3}	107.3	129.5
NEF130S	1270 {130}	10000	25	35 ~ 70	74	74	80	14.7 $\times10^5$\{15 $\times10^4$\}	355 {36.2}	131.2	159
NEF210S	2060 {210}	8000	25	–	83	83	90	22.5 $\times10^5$\{23 $\times10^4$\}	441 {45 }	144	200.5
NEF340S	3330 {340}	7500	45	–	95	95	110	32.3 $\times10^5$\{33 $\times10^4$\}	470 {48 }	174	237.8
NEF540S	5290 {540}	3400	50	–	109	109	120	43.1 $\times10^5$\{44 $\times10^4$\}	549 {56 }	201.7	252.8
NEF700S	6860 {700}	3100	50	–	118	118	130	58.8 $\times10^5$\{60 $\times10^4$\}	588 {60 }	230.4	278.8

Model No.	A_3	B	B_L	E	H	H_L	K	T	Allowable Misalignment		Weight kg	Moment of Inertia kg·m²	GD^2 {kgf·cm²}
									Angular Misalignment deg	Axial Displacement (Note)			
NEF02S	–	20	–	4.9	32	45	57	11	1	±0.8	0.33	1.23×10^{-4}	{ 4.9 }
NEF04S	86.1	25.4	40	6.1	34	50	67.5	15.5	1	±0.8	0.6	2×10^{-4}	{ 8 }
NEF10S	86.6	25.4	40	6.6	46	66	81	16	1	±1.0	0.8	6×10^{-4}	{ 25 }
NEF18S	98.3	28.7	45	8.3	51	66	93	23	1	±1.2	1.3	13×10^{-4}	{ 53 }
NEF25S	111.2	33.5	50	11.2	61	78	104	21	1	±1.4	1.8	22×10^{-4}	{ 89 }
NEF45S	131.7	41.1	60	11.7	71	92	126	23	1	±1.6	4.3	56×10^{-4}	{ 224 }
NEF80S	151.7	47.8	70	11.7	84	104	143	29.5	1	±1.8	6.9	110×10^{-4}	{ 440 }
NEF130S	186.8	57.2	85	16.8	106	129	168	20	1	±2.5	11.5	270×10^{-4}	{ 1080 }
NEF210S	257	63.5	120	17.0	118	147	194	32.5	1	±2.7	16.4	520×10^{-4}	{ 2080 }
NEF340S	301.6	76.2	140	21.6	137	166	214	19.5	1	±3.3	28.0	880×10^{-4}	{ 3520 }
NEF540S	303.9	88.9	140	23.9	156	191	246	24.5	1	±3.8	33	1750×10^{-4}	{ 7000 }
NEF700S	327.2	101.6	150	27.2	169	209	276	40	1	±4.0	37	3250×10^{-4}	{ 13000 }

Notes 1. See p. 12 for extended diameter and long hub dimensions.
With the long hub, the overall length is extended because dimension "B" is lengthened.
2. All stocked models are manufactured with pilot bores.
Models NEF04W through NEF130W have been stocked with shaft bores machined within the above standard stock bore diameter range. (New JIS key, normal type)
3. The maximum rotation speed depends on the transmission capacity of the coupling.
No balance adjustment has been conducted.
4. The weight, moment of inertia and GD^2 are the values at maximum bore diameter (keyway). For the extended-diameter hub and the long hub, add the individual values listed below.
5. The allowable axial displacement is based on the assumption that the angular misalignment is "0".
6. Check the key surface pressure in accordance with your operating conditions (see p. 23). The hub material is S45C.

Reference Number System (Example)

NEF18S - N30J X K40E

- Model No. / Single Type
- Type of Hub
  - N: Standard Hub
  - K: Extended-Dia. Hub
  - L: Long Hub
  - H: Taper-Lock Hub (See p. 31)
- Bore Diameter (Rough bore: R)
- Shaft Coupling Method
  - J: Keyway of new JIS normal type
  - E: Keyway of old JIS Type 2
  - C: Clamp (See p. 28)

*1: Indicate the smaller bore diameter first.
*2: Indicate the rough bore (symbol "R") first.

NEF Clamp Method: Spacer Type Couplings

The NEF Clamp Method enables friction coupling to a shaft, with one bolt tightened in each hub.
Compared to the Power-Lock Method (see p. 26) that also employs friction coupling, these couplings can reduce axial dimension, saving installation space.
The Spacer Type can absorb all types of misalignment, while the Single Type coupling can handle all misalignments except parallel misalignment.

Spacer Type

NEF02W standard hub

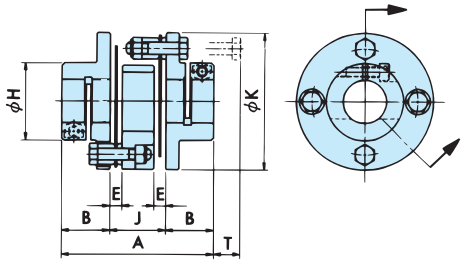

NEF04/10/18/25/45W standard hub

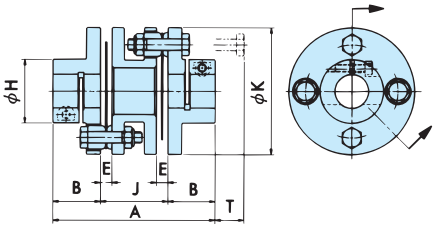

NEF10/18/25W square hub

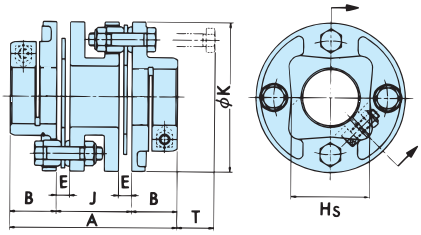

NEF02W extended-diameter hub

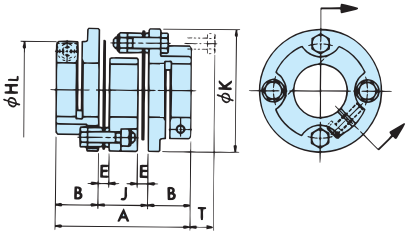

NEF04/45W extended-diameter hub

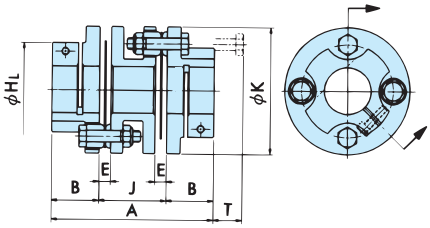

Spacer Type

Unit: mm

Model No.	Allowable Torque N·m{kgf·m}	Max. Rotation Speed r/min	Standard Stock Bore Diameter	Bore Diameter	Torsional Stiffness N·m/rad {kgf·m/rad}	Axial Spring Constant N/mm {kgf/mm}	A	B
NEF02W	19.6{ 2}	20000	⑩, ⑫, ⑮, ⑱, 19, 20, 22, 24, 25	8 ~ 25	1.00×10^4{0.10×10⁴}	34.3{ 3.5}	63.0	20
NEF04W	39.2{ 4}	20000	⑫, ⑭, ⑮, ⑯, ⑰, 19, 20, 22, 24, 25	10 ~ 26	1.18×10^4{0.12×10⁴}	20.6{ 2.1}	86.8	25.4
NEF10W	98 {10}	20000	⑮, ⑱, ⑳, ㉒, 24, 25, 28, 30, 35	10 ~ 35	3.92×10^4{0.4 ×10⁴}	29.4{ 3 }	89.8	25.4
NEF18W	176 {18}	18000	⑲, ㉒, ㉕, 28, 30, 32, 35	14 ~ 35	7.84×10^4{0.8 ×10⁴}	63.7{ 6.5}	104.4	28.7
NEF25W	245 {25}	15000	㉕, ㉚, 32, 35, 38, 40, 42	25 ~ 42	12.7×10^4{1.3 ×10⁴}	78.4{ 8 }	120	33.5
NEF45W	441 {45}	13000	㉚, ㊳, ㊵, ㊷, 45, 50, 55	25 ~ 55	21.6×10^4{2.2 ×10⁴}	109 {11.1}	144.2	41.1

Model No.	E	H	H_L	H_S	J	K	U	T	Weight kg	Moment of Inertia kg · cm²	GD² {kgf · cm²}	Allowable Misalignment		
												Angular Misalignment deg	Parallel Misalignment	Axial Displacement
NEF02W	4.9	32	45	–	23	57	–	11	0.45(0.46)	1.68(1.90)	6.72(7.61)	2	0.3	±1.6
NEF04W	6.1	34	50	–	36	67.5	–	15.5	1.28(1.29)	5.2 (5.7)	20.9 (22.7)	2	0.5	±1.6
NEF10W	6.6	46	–	47	39	81	66	16	1.52(1.35)	11.7 (11.0)	46.7 (44.0)	2	0.55	±2.0
NEF18W	8.3	51	–	49	47	93	68	23	2.45(2.24)	24.8 (23.6)	99.1 (94.3)	2	0.6	±2.4
NEF25W	11.2	61	–	60	53	104	78.3	19	3.3 (3.0)	40.8 (38.5)	163 (154)	2	0.7	±2.8
NEF45W	11.7	71	92	–	62	126	–	23	6.9 (7.0)	95.8 (104)	383 (416)	2	0.8	±3.2

Notes
1. The maximum rotation speed depends on the transmission capacity of the coupling.
   No balance adjustment has been conducted.
2. The circled standard stock bore diameters are for the standard hubs, the diameters in squares are for the square hub, and unmarked diameters are for the extended-diameter hubs.
3. The weight, moment of inertia and GD² are the values at maximum bore diameter for the round hub. Values in parentheses for the NEF02/04/45 apply to the extended-diameter hub. Values in parentheses for the NEF10/18/25 apply to the square hub.
4. The allowable axial displacement is based on the assumption that the angular misalignment is “0”.
5. To prevent the clamp bolt from loosening, the square hub type uses a U-nut, while other types use a NYLOCK bolt.

NEF Clamp Method: Single Type Couplings

Single Type

NEF02S/04S/10S/18S/25S/45S standard hub

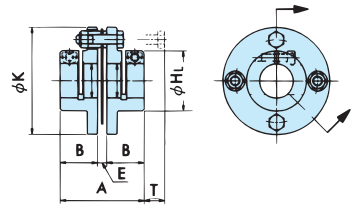

NEF02S/04S/45S extended-diameter hub

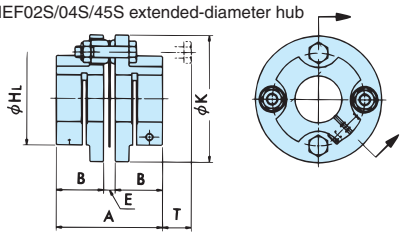

NEF10S/18S/25S square hub

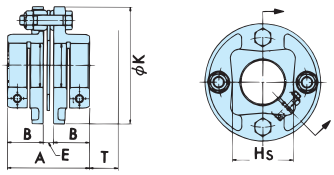

Single Type

Unit: mm

Model No.	Allowable Torque N·m{kgf·m}	Max. Rotation Speed r/min	Standard Stock Bore Diameter	Bore Diameter	Torsional Stiffness N·m/rad {kgf·m/rad}	Axial Spring Constant N/mm {kgf/mm}	A	B
NEF02S	19.6{ 2}	20000	⑩, ⑫, ⑮, ⑱, 19, 20, 22, 24, 25	8 ~ 25	1.96×10^4 {0.2 $\times10^4$}	68.6{ 7.0}	44.9	20
NEF04S	39.2{ 4}	20000	⑫, ⑭, ⑮, ⑯, ⑰, 19, 20, 22, 24, 25	10 ~ 26	2.45×10^4 {0.25 $\times10^4$}	40.2{ 4.1}	56.9	25.4
NEF10S	98 {10}	20000	⑮, ⑱, ⑳, ㉒, 24, 25, 28, 30, 35	10 ~ 35	8.82×10^4 {0.9 $\times10^4$}	58.8{ 6 }	57.4	25.4
NEF18S	176 {18}	18000	⑲, ㉒, ㉕, 28, 30, 32, 35	14 ~ 35	15.7×10^4 {1.6 $\times10^4$}	127 {13 }	65.7	28.7
NEF25S	245 {25}	15000	㉕, ㉚, 32, 35, 38, 40, 42	25 ~ 42	25.5×10^4 {2.6 $\times10^4$}	157 {16 }	78.2	33.5
NEF45S	441 {45}	13000	㉚, ㊳, ㊵, ㊷, 45, 50, 55	25 ~ 55	44.1×10^4 {4.5 $\times10^4$}	219 {22.3}	93.9	41.1

Model No.	E	H	H_L	Hs	K	U	T	Weight kg	Moment of Inertia kg · cm²	GD² {kgf · cm²}	Allowable Misalignment	
											Angular Misalignment deg	Axial Displacement
NEF02S	4.9	32	45	–	57	–	11	0.33(0.39)	1.23(1.56)	4.9 (6.24)	1	±0.8
NEF04S	6.1	34	50	–	67.5	–	15.5	0.78(0.79)	2.78(3.23)	11.1 (12.9)	1	±0.8
NEF10S	6.6	46	–	47	81	66	16	0.92(0.80)	6.43(5.85)	25.7 (23.4)	1	±1.0
NEF18S	8.3	51	–	49	93	68	23	1.45(1.24)	13.5 (12.2)	54.1 (48.8)	1	±1.2
NEF25S	11.2	61	–	60	104	78.3	19	2.1 (1.8)	23 (20.9)	92 (83.4)	1	±1.4
NEF45S	11.7	71	92	–	126	–	23	4.6 (4.7)	57.5 (65.8)	230 (263)	1	±1.6

Notes 1. The maximum rotation speed depends on the transmission capacity of the coupling.
No balance adjustment has been conducted.
2. The circled standard stock bore diameters are for the standard hubs, the diameters in squares are for the square hub, and unmarked diameters are for the extended-diameter hubs.
3. The weight, moment of inertia and GD² are the values at maximum bore diameter for the round hub. Values in parentheses for the NEF02/04/45 apply to the extended-diameter hub. Values in parentheses for the NEF10/18/25 apply to the square hub.
4. The allowable axial displacement is based on the assumption that the angular misalignment is "0".
5. To prevent the clamp bolt from loosening, the square hub type uses a U-nut, while other types use a NYLOCK bolt.

Reference Number System (Example)

NEF18W - N25C X B30C

- NEF18W: Model No.
  - Type
    - S: Single Type
    - W: Spacer Type
- N25C: Type of Hub
  - N: Standard Hub
  - K: Extended-Dia. Hub
  - L: Long Hub
  - H: Taper-Lock Hub (See p. 31)
- B30C: Bore Diameter (Rough bore: R)
- X: Shaft Coupling Method
  - J: Keyway of new JIS normal type (See p. 20)
  - C: Clamp

*1: Indicate the smaller bore diameter first.
*2: Indicate the rough bore (symbol "R") first.

NEF Clamp Method

Clamp Transmission Torque

When coupling to a shaft, the clamp bolt should be tightened using a torque wrench to the appropriate torque listed below. Depending on the bolt size and bore diameter, the clamp transmission torque may be less than the allowable torque of the coupling. In this case, the clamp transmission torque represents the coupling transmission torque, so take caution in selecting the torque.

Clamp Shaft Bore Diameter and Torque

Model No.	Bore Diameter ϕ mm	10	11	12	14	15	16	17	18	19	20	22	24	25	28	30	32	35
NEF02	Bolt Size	**M4**	M4	**M4**	M4	**M4**	M4	M4	**M4**	**M4**	**M4**	**M4**	**M4**	**M4**				
	Tightening Torque N-m {kgf-m}	**4.02 {0.41}**	4.02 {0.41}	**4.02 {0.41}**	4.02 {0.41}	**4.02 {0.41}**	4.02 {0.41}	4.02 {0.41}	**4.02 {0.41}**	**4.02 {0.41}**	**4.02 {0.41}**	**4.02 {0.41}**	**4.02 {0.41}**	**4.02 {0.41}**				
	Transmission Torque N-m {kgf-m}	**18.6 {1.90}**	19.6 {2.00}	**19.6 {2.00}**	19.6 {2.00}	**19.6 {2.00}**	19.6 {2.00}	19.6 {2.00}	**19.6 {2.00}**	**19.6 {2.00}**	**19.6 {2.00}**	**19.6 {2.00}**	**19.6 {2.00}**	**19.6 {2.00}**				
NEF04	Bolt Size			**M4**	**M4**	**M4**	**M4**	**M4**	M4	**M4**	**M4**	**M4**	**M4**	**M4**				
	Tightening Torque N-m {kgf-m}			**4.02 {0.41}**	**4.02 {0.41}**	**4.02 {0.41}**	**4.02 {0.41}**	**4.02 {0.41}**	4.02 {0.41}	**4.02 {0.41}**	**4.02 {0.41}**	**4.02 {0.41}**	**4.02 {0.41}**	**4.02 {0.41}**				
	Transmission Torque N-m {kgf-m}			**17.6 {1.8}**	**30.1 {3.07}**	**34.3 {3.5}**	**37.2 {3.8}**	**39.2 {4.0}**	39.2 {4.0}	**39.2 {4.0}**	**39.2 {4.0}**	**39.2 {4.0}**	**39.2 {4.0}**	**39.2 {4.0}**				
NEF10	Bolt Size					**M6**	M6	M6	**M6**	M6	**M6**	**M6**	**M6**	**M6**	**M6**	**M6**	M6	**M5**
	Tightening Torque N-m {kgf-m}					**13.7 {1.40}**	13.7 {1.40}	13.7 {1.40}	**13.7 {1.40}**	13.7 {1.40}	**13.7 {1.40}**	**13.7 {1.40}**	**13.7 {1.40}**	**13.7 {1.40}**	**13.7 {1.40}**	**13.7 {1.40}**	13.7 {1.40}	**8.33 {0.85}**
	Transmission Torque N-m {kgf-m}					**85 {8.68}**	94 {9.60}	98 {10.0}	**98 {10.0}**	98 {10.0}	**98 {10.0}**	**98 {10.0}**	**98 {10.0}**	**98 {10.0}**	**98 {10.0}**	**98 {10.0}**	98 {10.0}	**98 {10.0}**

Model No.	Bore Diameter ϕ mm	15	16	17	18	19	20	22	24	25	28	30	32	35	38	40	42	45	48	50	52	55
NEF18	Bolt Size	M6	M6	M6	M6	**M6**	M6	**M6**	M6	**M6**	**M6**	**M6**	**M6**	**M6**								
	Tightening Torque N-m {kgf-m}	13.7 {1.40}	13.7 {1.40}	13.7 {1.40}	13.7 {1.40}	**13.7 {1.40}**	13.7 {1.40}	**13.7 {1.40}**	13.7 {1.40}	**13.7 {1.40}**	**13.7 {1.40}**	**13.7 {1.40}**	**13.7 {1.40}**	**13.7 {1.40}**								
	Transmission Torque N-m {kgf-m}	68 {6.97}	83 {8.45}	90 {9.18}	100 {10.2}	**109 {11.1}**	113 {11.5}	**126 {12.9}**	136 {13.9}	**143 {14.6}**	**176 {18.0}**	**176 {18.0}**	**176 {18.0}**	**176 {18.0}**								
NEF25	Bolt Size									**M8**	M8	**M8**	**M8**	**M8**	**M6**	**M6**	**M6**					
	Tightening Torque N-m {kgf-m}									**34.3 {3.50}**	34.3 {3.50}	**34.3 {3.50}**	**34.3 {3.50}**	**34.3 {3.50}**	**13.7 {1.40}**	**13.7 {1.40}**	**13.7 {1.40}**					
	Transmission Torque N-m {kgf-m}									**245 {25.0}**	245 {25.0}	**245 {25.0}**	**245 {25.0}**	**245 {25.0}**	**230 {25.0}**	**245 {25.0}**	**245 {25.0}**					
NEF45	Bolt Size											**M8**	M8	M8	**M8**	**M8**	**M8**	**M8**	M8	**M8**	M8	**M8**
	Tightening Torque N-m {kgf-m}											**34.3 {3.50}**	34.3 {3.50}	34.3 {3.50}	**34.3 {3.50}**	**34.3 {3.50}**	**34.3 {3.50}**	**34.3 {3.50}**	34.3 {3.50}	**34.3 {3.50}**	34.3 {3.50}	**34.3 {3.50}**
	Transmission Torque N-m {kgf-m}											**363 {37.0}**	372 {38.0}	393 {40.1}	**416 {42.4}**	**429 {43.8}**	**440 {44.9}**	**441 {45.0}**	441 {45.0}	**441 {45.0}**	441 {45.0}	**441 {45.0}**

Boldface numbers indicate products in stock.

● Recommended shaft bore tolerance of clamp hub = h7

* Note: For ϕ 35 bore diameters, the recommended shaft bore tolerance is (+0.010 to 0) or (+0.010 to -0.015).

ECHT-FLEX Coupling Taper-Lock Series

Fusion of the ECHT-Flex Coupling and the Power-Lock.

Tsubaki's ECHT-Flex Coupling is a flexible coupling with superior qualities named after the German word *echt*, meaning "real". The coupling offers high torque in a small footprint by using a specially designed hub that leverages the tapering technology of our Power-Lock® series.
This coupling meets the growing demand for servo driven applications.

Models

Spacer Type

Single Type

1. Compact
The specially designed tapered hub shortens the total length by up to 37 percent.

2. High Torque
Increased clamping force meets the allowable coupling torque for all standard shaft bore diameters. No torque loss even in the small diameter range.

3. Wide Bore Range
Our standard line-up based on 8 product variations and 708 shaft diameters offers a broad range to choose from for a variety of applications.

4. Interchangeable
The disk clamping element features a common design with existing products to allow interchangeable use with keyed shaft hole hubs, clamp hubs, and long spacers used in other series. The customer can also easily perform installation and removal.

5. High Torsional Stiffness
Optimized disk geometry based on finite element analysis delivers both high torsional stiffness and flexibility.

6. Environmentally Friendly
These low-resource, low-energy couplings boast 37 percent less mass and 26 percent less moment of inertia. Each product complies with RoHS directives and contains no harmful substances.

Structure

Taper-Lock Structure

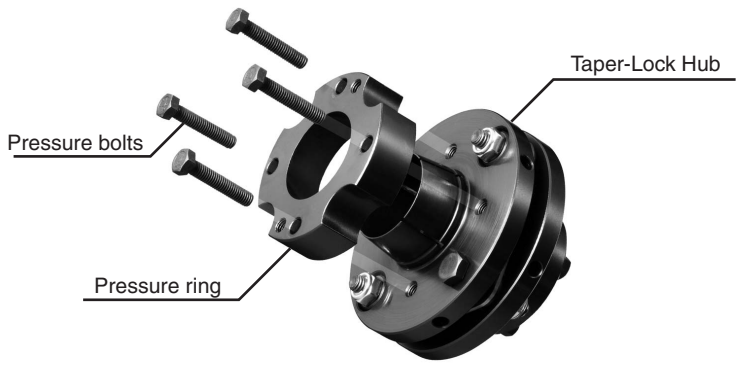

NEF Taper-Lock Series

NEF Spacer Type Coupling: Taper-Lock Hub

Spacer Type NEF04W to NEF25W

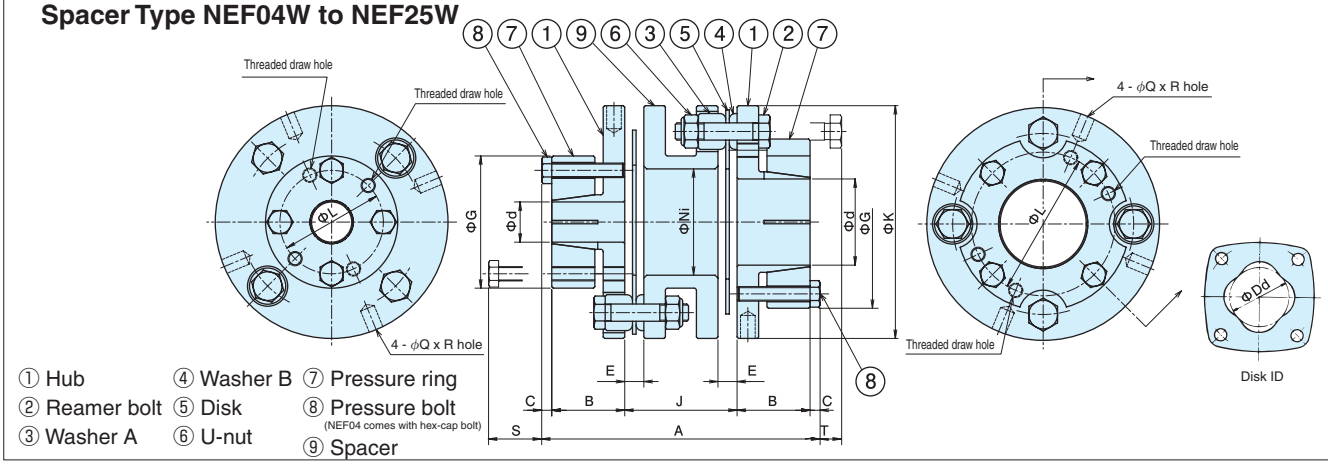

① Hub ② Reamer bolt ③ Washer A ④ Washer B ⑤ Disk ⑥ U-nut ⑦ Pressure ring ⑧ Pressure bolt (NEF04 comes with hex-cap bolt) ⑨ Spacer

Unit: mm

Model No.	Allowable Torque N·m {kgf·m}	Max. Rotation Speed r/min	Min. Shaft Bore Diameter	Max. Shaft Bore Diameter	Torsional Stiffness N·m/rad {kgf·m/rad}	Axial Spring Constant N/mm {kgf/mm}	Allowable Misalignment			Weight kg	Moment of Inertia kg · cm²	GD² {kgf · cm²}
							Angular Misalignment deg	Parallel Misalignment	Axial Displacement			
NEF04W	39.2{4}	20000	10	22	1.18×10^4 {0.12×10^4}	20.6{2.1}	2	0.5	±1.6	1.0	5.36×10^{-4}	21
NEF10W	98{10}	20000	14	35	3.92×10^4 {0.4×10^4}	29.4{3.0}	2	0.55	±2.0	1.5	12.8×10^{-4}	51
NEF18W	176{18}	18000	15	38	7.84×10^4 {0.8×10^4}	63.7{6.5}	2	0.6	±2.4	2.3	26.0×10^{-4}	104
NEF25W	245{25}	15000	24	50	12.7×10^4 {1.3×10^4}	78.4{8.0}	2	0.7	±2.8	2.9	42.4×10^{-4}	170

Model No.	A	B	K	E	C	d	G	L	Ni	Dd	Q	R	J	S	T
NEF04W	88	22	67.5	6.1	4	10·11·12·14·15·16 17·18·19·20·22	42	34	25	29	5.1	8	36	21	15.4
NEF10W	96.8	25.4	81	6.6	3.5	14·15·16·17·18·19·20	46	36	37	37	5.1	8	39	26	12.5
						22·24·25·28	53	43							
						30·32·35	60	50							
NEF18W	109	27	93	8.3	4	15·16·17·18·19·20·22	49	37	38	39	6.2	10	47	26	20.7
						24·25·28·30	58	46							
						32·35·38	66	54							
NEF25W	122	30.5	104	11.2	4	24·25·28·30·32	60	48	47	45	6.2	10	53	31	20
						35·38·40·42	70	56							
						45·48·50	78	66							

Notes 1. The maximum rotation speed does not take dynamic balance into consideration.
2. The weight, moment of inertia, and GD² are the values at maximum shaft bore diameter.
3. Each allowable misalignment is based on the assumption that both of the other two misalignment values are 0 (zero).
4. The standard shaft bore diameters are given in the following table.
5. The recommended tolerance for mounting on shafts is h7. 35-mm diameter shaft bores will also fit servo motor shafts with a +0.010 to -0 tolerance.
6. This series can be used with other types of shaft clamping elements such as keys and clamps.

Standard Shaft Bore Diameters

Size	Pressure Bolt Size	Tightening Torque N·m {kgf·m}	Standard Shaft Bore Diameter (mm)																							
			10	11	12	14	15	16	17	18	19	20	22	24	25	28	30	32	35	38	40	42	45	48	50
NEF04	M4	3.0{0.3}	●	●	●	●	●	●	●	●	●	●	●												
NEF10	M5	4.9{0.5}				●	●	●	●	●	●	●	●	●	●	●	●	●	●						
NEF18	M6	9.8{1.0}					●	●	●	●	●	●	●	●	●	●	●	●	●	●					
NEF25	M6	9.8{1.0}												●	●	●	●	●	●	●	●	●	●	●	●

TRANSMISSION CAPACITY/ DIMENSIONS NEF TAPER-LOCK

NEF Single Type Coupling: Taper-Lock Hub

Single Type NEF04S to NEF25S

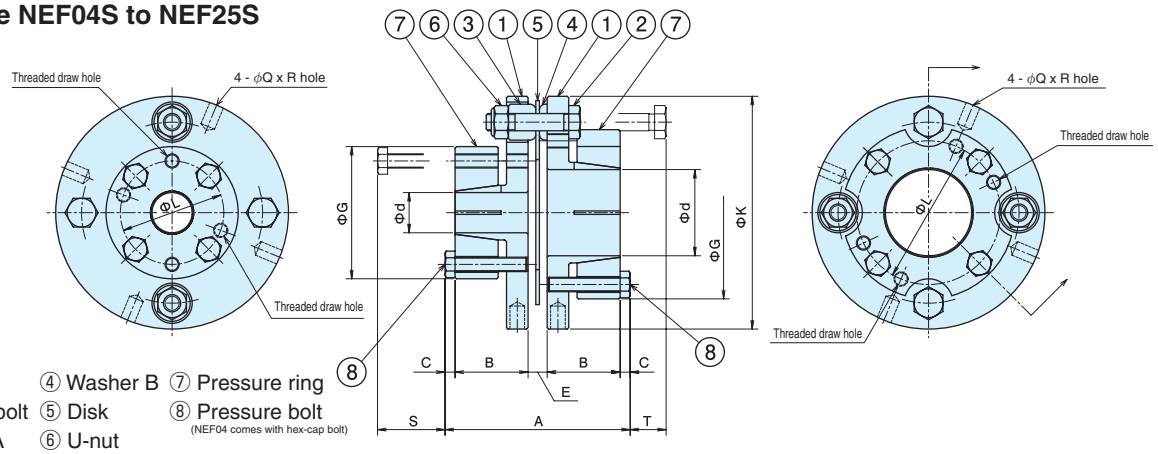

① Hub ② Reamer bolt ③ Washer A ④ Washer B ⑤ Disk ⑥ U-nut ⑦ Pressure ring ⑧ Pressure bolt (NEF04 comes with hex-cap bolt)

Unit: mm

Model No.	Allowable Torque N·m {kgf·m}	Max. Rotation Speed r/min	Min. Shaft Bore Diameter	Max. Shaft Bore Diameter	Torsional Stiffness N·m/rad {kgf·m/rad}	Axial Spring Constant N/mm {kgf/mm}	Allowable Misalignment			Weight kg	Moment of Inertia kg · cm²	GD² {kgf · cm²}
							Angular Misalignment deg	Parallel Misalignment	Axial Displacement			
NEF04S	39.2{4}	20000	10	22	2.45×10^4 $\{0.25\times10^4\}$	40.2{4.1}	1	—	±0.8	0.6	2.94×10^{-4}	12
NEF10S	98{10}	20000	14	35	8.8×10^4 $\{0.9\times10^4\}$	58.8{6.0}	1	—	±1.0	0.9	7.30×10^{-4}	29
NEF18S	176{18}	18000	15	38	15.7×10^4 $\{1.6\times10^4\}$	127{13}	1	—	±1.2	1.3	14.2×10^{-4}	57
NEF25S	245{25}	15000	24	50	25.5×10^4 $\{2.6\times10^4\}$	157{16}	1	—	±1.4	1.7	23.5×10^{-4}	94

Model No.	A	B	K	E	C	d	G	L	Dd	Q	R	S	T
NEF04S	58.1	22	67.5	6.1	4	10·11·12·14·15·16 17·18·19·20·22	42	34	29	5.1	8	21	15.4
NEF10S	64.4	25.4	81	6.6	3.5	14·15·16·17·18·19·20	46	36	37	5.1	8	26	12.5
						22·24·25·28	53	43					
						30·32·35	60	50					
NEF18S	70.3	27	93	8.3	4	15·16·17·18·19·20·22	49	37	39	6.2	10	26	20.7
						24·25·28·30	58	46					
						32·35·38	66	54					
NEF25S	80.2	30.5	104	11.2	4	24·25·28·30·32	60	48	45	6.2	10	31	20
						35·38·40·42	70	56					
						45·48·50	78	66					

Notes
1. The maximum rotation speed does not take dynamic balance into consideration.
2. The weight, moment of inertia, and GD² are the values at maximum shaft bore diameter.
3. Each allowable misalignment is based on the assumption that both of the other two misalignment values are 0 (zero).
4. The standard shaft bore diameters are given in the bottom table on the previous page.
5. The recommended tolerance for mounting on shafts is h7. 35-mm diameter shaft bores will also fit servo motor shafts with a +0.010 to -0 tolerance.
6. This series can be used with other types of shaft clamping elements such as keys and clamps.

Reference Number System (Example)

NEF18 S - H 20 X H 35

- NEF18: Model No.
- S: Type — S: Single Type, W: Spacer Type
- H 20: Taper-Lock Hub
- H 35: Shaft Bore Diameter

NEH Series: Large-Size Spacer Type Couplings

NEH Series large-size Spacer Type couplings can be used for applications up to176400 N·m {18000 kgf·m}.

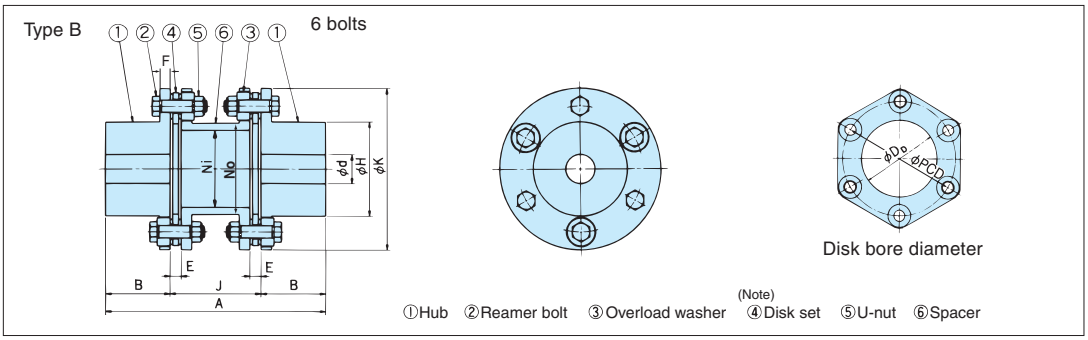

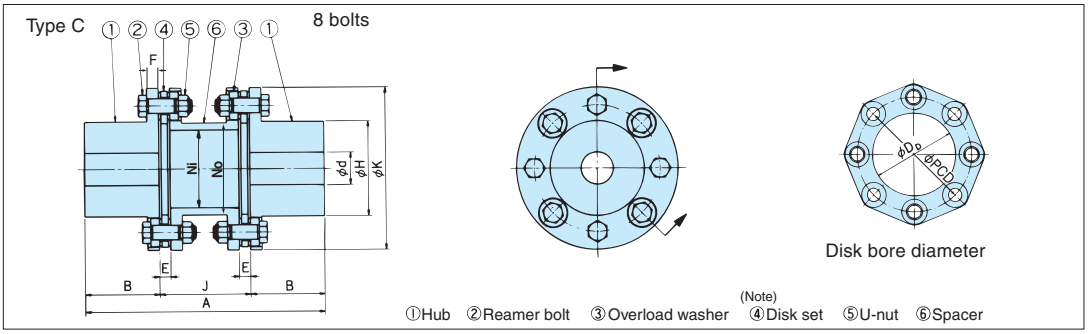

Note: The disk set is comprised of a disk, bush and collar. (See p. 5)

Unit: mm

Model No.	Type (Number of Bolts)	Allowable Torque N·m{kgf·m}	Max. Rotation Speed r/min	Rough Bore d	Max. Shaft Dia. φ / Keyed Bore	Torsional Stiffness N·m/rad{kgf·m/rad}	Axial Spring Constant N/mm{kgf/mm}
NEH 09W	B (6)	8820{ 900}	5000	70	111	51.9×10^5\{ 5.3×10^5\}	627{ 64}
NEH 14W	C (8)	13700{ 1400}	4700	70	111	84.3×10^5\{ 8.6×10^5\}	1380{141}
NEH 20W	C (8)	19600{ 2000}	4300	75	133	12.7×10^6\{ 1.3×10^6\}	1370{140}
NEH 30W	C (8)	29400{ 3000}	3900	75	152	20.6×10^6\{ 2.1×10^6\}	1700{183}
NEH 41W	C (8)	40200{ 4100}	3700	120	165	25.5×10^6\{ 2.6×10^6\}	1880{192}
NEH 55W	C (8)	53900{ 5500}	3600	130	187	35.3×10^6\{ 3.6×10^6\}	2087{213}
NEH 70W	C (8)	68600{ 7000}	3400	150	205	44.7×10^6\{ 4.6×10^6\}	1920{196}
NEH 90W	C (8)	88200{ 9000}	3100	150	231	58.2×10^6\{ 5.9×10^6\}	2078{212}
NEH110W	C (8)	107800{11000}	2900	190	254	73.8×10^6\{ 7.5×10^6\}	2038{208}
NEH135W	C (8)	132300{13500}	2700	190	263	94.6×10^6\{ 9.7×10^6\}	2254{230}
NEH150W	C (8)	147000{15000}	2500	210	275	10.0×10^7\{10.2×10^6\}	2450{250}
NEH180W	C (8)	176400{18000}	2400	210	289	12.2×10^9\{12.4×10^6\}	2666{272}

Model No.	PCD	A	B	E	F	H	J	K	D_D	N_i	N_O	Allowable Misalignment: Angular Misalignment deg	Allowable Misalignment: Parallel Misalignment	Allowable Misalignment: Axial Displacement	Weight kg	Moment of Inertia kg·cm²	GD^2 {kgf·cm²}
NEH 09W	215	375	110	19.0	18	161	155	276	144	138	156	1.4	1.1	±3.2	55	5000	{ 20000}
NEH 14W	215	409	127	19.0	20	161	155	276	155	132	156	1	1.1	±2.1	61	5500	{ 22000}
NEH 20W	247	463	146	19.0	23	193	171	308	178	160	186	1	1.3	±2.4	85	10300	{ 41000}
NEH 30W	279	517	165	21.5	25.5	218	187	346	201	180	210	1	1.4	±2.8	125	18500	{ 74000}
NEH 41W	304	566	171	24.0	28	240	224	375	218	198	230	1	1.7	±2.8	172	29300	{ 117000}
NEH 55W	355	720	225	29.5	35	272	270	445	252	228	260	1	2.0	±3.6	293	64800	{ 259000}
NEH 70W	381	768	247	31.3	35	297	274	470	275	249	285	1	2.1	±3.8	344	90800	{ 363000}
NEH 90W	419	843	278	32.0	39	334	287	511	304	280	320	1	2.2	±4.3	456	144000	{ 574000}
NEH110W	457	902	305	32.5	42	364	292	556	343	296	340	1	2.2	±4.8	575	215000	{ 859000}
NEH135W	482	945	317	34.0	47	382	311	587	350	312	360	1	2.4	±5.0	696	290000	{1159000}
NEH150W	508	1005	331	34.5	49	399	343	629	368	325	375	1	2.6	±5.6	826	390000	{1559000}
NEH180W	533	1050	347	35.5	53	419	356	654	380	340	390	1	2.8	±5.7	954	506000	{2023000}

Notes
1. All sizes are custom-made.
2. The maximum rotation speed depends on the transmission capacity of the coupling.
   No balance adjustment has been conducted. Contact us to adjust the balance for couplings at a high rotation speed.
3. The weight, moment of inertia and GD^2 are the values at maximum bore diameter (keyway).
4. Spacer lengths other than the standard length can be also manufactured. For details on the long spacer type, see p. 22.
5. The allowable axial displacement is based on the assumption that the angular misalignment is "0".
6. Check the key surface pressure in accordance with your operating conditions (see p. 23). The hub material is S45C.

Single-Side Adaptor Hub Type (A-Hub Type) / Unit Spacer Type (U-Type) Couplings

The NEH Series Adaptor Hub Type coupling provides a larger bore diameter than the standard hub. With the Unit Spacer Type, the spacer unit can be mounted or removed without the need to disassemble the disk connecting section.

A-Hub Type

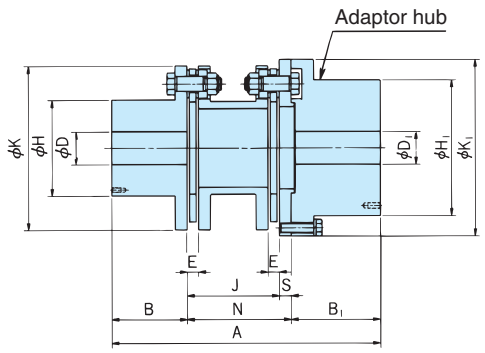

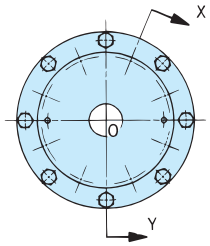

U-Type

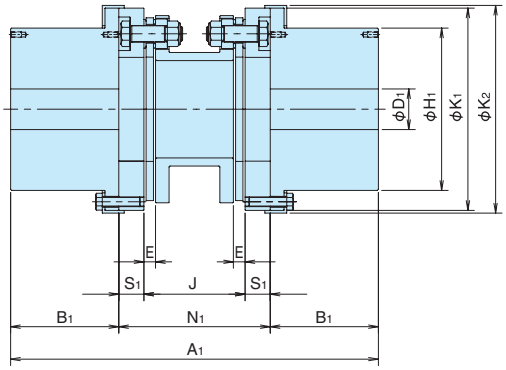

Unit: mm

Model No.	Allowable Torque N·m{kgf·m}	Max. Rotation Speed r/min	Standard Hub		Adaptor Hub		Torsional Stiffness N·m/rad {kgf·m/rad}	Axial Spring Constant N/mm{kgf/mm}	A	A_1	B	B_1	E	H	H_1
			Rough Bore	Max. Shaft Dia. φD	Rough Bore	Max. Shaft Dia. ϕD_1									
NEH09W(U)	8820 { 900}	5000	70	111	50	158	5.19×10^6 {5.3×10^5}	627 { 64}	435	535	110	152	19	161	228
NEH14W(U)	13700 {1400}	4700	70	111	55	158	8.43×10^6 {8.6×10^5}	1380 {141}	452	531	127	150	19	161	228
NEH20W(U)	19600 {2000}	4300	75	133	65	182	1.27×10^7 {1.3×10^6}	1370 {140}	491	565	146	151	19	193	264
NEH30W(U)	29400 {3000}	3900	75	152	75	206	2.06×10^7 {2.1×10^6}	1790 {183}	577.5	680	165	200	21.5	218	300
NEH41W(U)	40200 {4100}	3700	120	165	80	224	2.55×10^7 {2.6×10^6}	1880 {192}	653	790	171	230	24	240	324

Model No.	J	K	K_1	K_2	N	N_1	S	S_1	Allowable Misalignment			Weight kg		Moment of Inertia kg·cm²		GD² {kgf·cm²}	
									Angular Misalignment deg	Parallel Misalignment	Axial Displacement	A	U	A	U	A	U
NEH09W(U)	155	276	297	313	173	231	18	38	1.4	1.1	±3.2	81	108	0.85	1.2	{ 3.4}	{ 4.8}
NEH14W(U)	155	276	297	313	175	231	20	38	1	1.1	±2.1	88	115	0.93	1.3	{ 3.7}	{ 5.2}
NEH20W(U)	171	308	334	344	194	263	23	46	1	1.3	±2.4	120	155	1.68	2.33	{ 6.7}	{ 9.3}
NEH30W(U)	187	346	374	384	212.5	280	25.5	46.5	1	1.4	±2.8	177	230	3.05	4.23	{12.2}	{16.9}
NEH41W(U)	224	375	422	438	252	330	28	52	1	1.7	±2.8	248	325	5.05	7.2	{20.2}	{28.8}

Notes 1. All sizes are custom-made.
2. When placing an order, contact for drawings.

Reference Number System (Example)

NEH14W - N100J X A120J

- Model No.
- Type
  - W: Spacer Type
  - U: Unit Spacer Type
- Type of Hub
  - N: Standard Hub
  - A: Adaptor Hub
  - L: Long Hub
  - U: Unit Hub
- Bore Diameter (Rough bore: R)
- Shaft Coupling Method
  - J: Keyway of new JIS normal type

*1: Indicate the smaller bore diameter first.
*2: Indicate the rough bore (symbol "R") first.
*3: Unit Spacer Type (U-type) couplings cannot be combined with the adaptor hub (A-hub) type.

NEF Series: Gear Coupling (G-Type) Compatible Couplings

Through a reduction in the hub face distances (dimension "D"), the NEF-G Series G-Type coupling provides the same overall length and hub length as standard gear couplings. This makes the G-Type completely interchangeable with the standard gear couplings. Also, because there is no lubrication or man-hour costs involved, G-type couplings are ideal for TPM.

G-Type

① Hub G
② Spacer flange
③ Reamer bolt A
④ Washer
⑤ Disk
⑥ U-nut A
⑦ Reamer bolt B
⑧ U-nut B

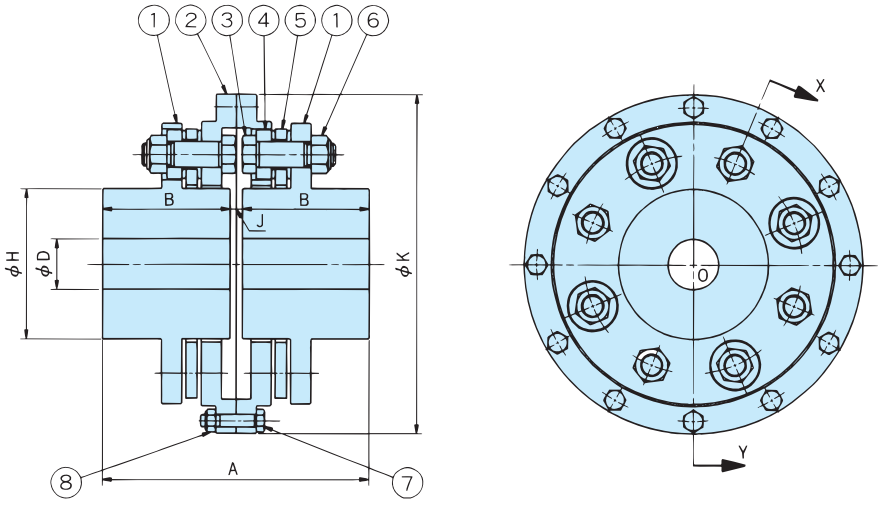

Unit: mm

Model No.	Allowable Torque N·m{kgf·m}	Max. Rotation Speed r/min	Max. Shaft Dia. D	A	B	H	J	K	Equivalent Gear Coupling		
									JIS Model	Max. Shaft Dia. φ	Torque N·m {kgf·m}
NEF 45G	441 { 45}	5000	32	88	40	47	8	161	100	25	196 { 20}
NEF 80G	784 { 80}	5000	40	98	45	57	8	184	112	32	392 { 40}
NEF130G	1270 { 130}	5000	48	108	50	69	8	207	125	40	784 { 80}
NEF210G	2060 { 210}	5000	55	134	63	80	8	245	140	50	1230 { 125}
NEF340G	3330 { 340}	5000	65	170	80	93	10	264	160	63	1760 { 180}
NEF540G	5290 { 540}	3400	75	190	90	106	10	306	180	71	2450 { 250}
NEF700G	6860 { 700}	3100	80	210	100	116	10	342	200	80	3480 { 355}
NEH 09G	8820 { 900}	3500	95	236	112	140	12	334	224	90	4900 { 500}
NEH 14G	13700 {1400}	3500	105	262	125	147	12	334	250	100	6960 { 710}
NEH 20G	19600 {2000}	3000	120	294	140	171	14	378	280	125	11000 {1120}
NEH 30G	29400 {3000}	2800	136	334	160	197	14	416	315	140	15700 {1600}
NEH 41G	40200 {4100}	2500	149	376	180	213	16	462	355	160	24500 {2500}

Notes 1. All sizes are custom-made.
2. When placing an order, contact for drawings. (With the NEF45G/80G/130G/210G/540G/700G, the reamer bolts protrude from the hub end faces.)

Reference Number System (Example)

NEF45G - GR X G30J

- NEF45G: Model No. / G-Type
- GR: Type of Hub — G: Hub for G-Type
- X: Bore Diameter (Rough bore: R)
- G30J: Shaft Coupling Method — J: Keyway of new JIS normal type

OTHER TYPES OF COUPLINGS

●Environmentally Resistant (Electroless Nickel-Plated / Stainless Steel Type)

The disk on these couplings is made of stainless steel. Other parts, however, can be plated with electroless nickel, or made of stainless steel, for rust-proof application, as required. Contact for drawings.

●Various Power-Lock Types

Suitable for shaft clamping when used in combination with various types of Power-Lock.

① The SL Series Power-Lock enables clamping from outside of the hub.

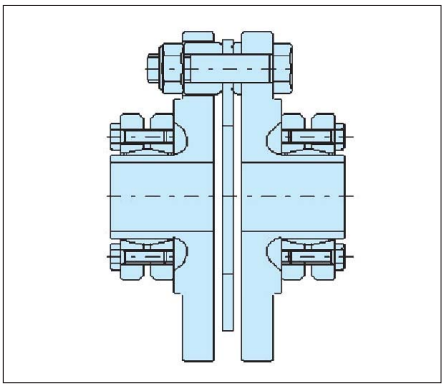

② The AS Series Power-Lock can reduce the axial dimension.

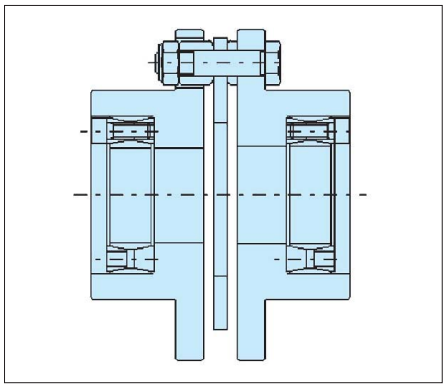

③ The TF Series Power-Lock can connect larger shaft diameters.

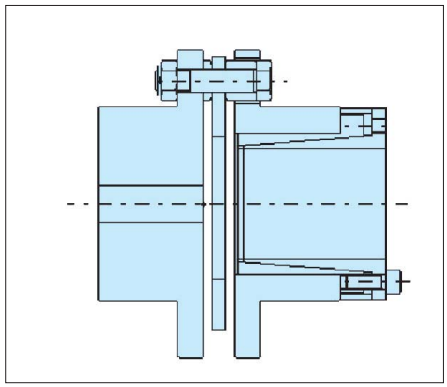

In addition to the above, other types of Power-Locks are also available. Contact for drawings.

●Single-Hub Insertion Type / Dual-Hub Insertion Type

Spacer Type couplings are suitable for applications where a shorter overall coupling length is desired.

① Single-Hub Insertion Type
With one hub mounted inside, the axial dimension can be reduced.

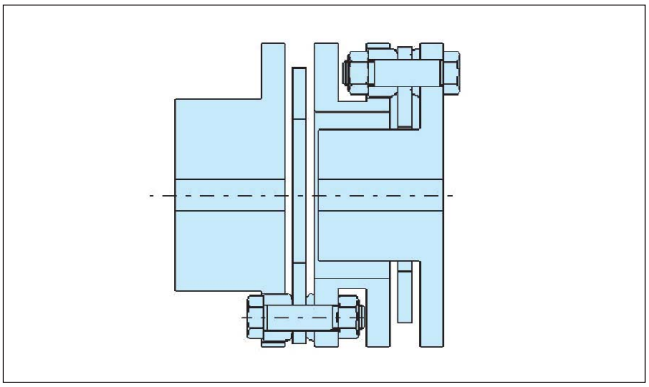

② Dual-Hub Insertion Type
With both hubs mounted inside, the axial dimension can be reduced even further.

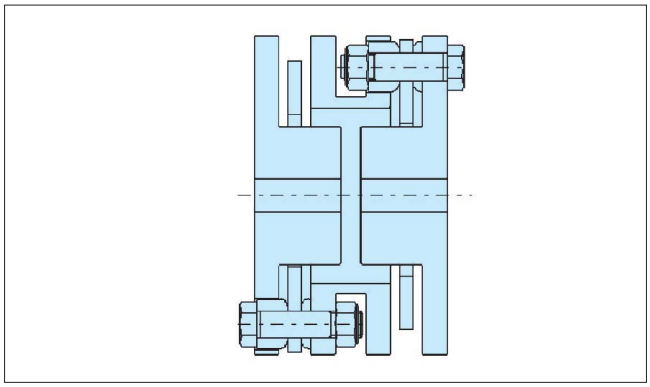

●Long Spacer High-Speed Type

When using a Long Spacer Type coupling at high rotation speeds, it is usually necessary to consider the critical rotation speed in order to avoid a resonance point. (See p. 9)
To avoid the critical rotation speed range, a larger size coupling may be selected. However, if the selection of a larger size is not an option, couplings with an increased spacer weight can be manufactured as shown below.

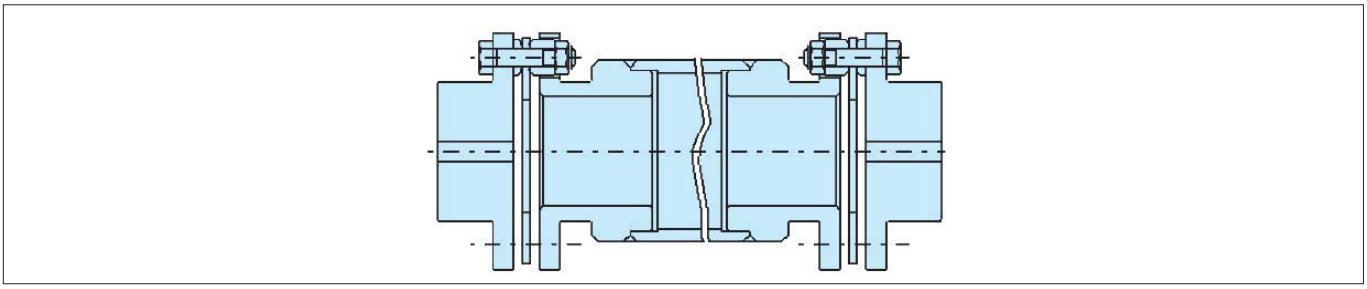

INSTALLATION

Centering Adjustment

① Single and Spacer Type Couplings

The more accurate the initial centering of the coupling, the less stress it will experience during operation. Wear of the shaft bearing, depressions in the mounting surface, changes in conditions affected by temperature and vibration can reduce the life of the coupling and your equipment. Center accurately and conduct periodic adjustment according to the following procedure.

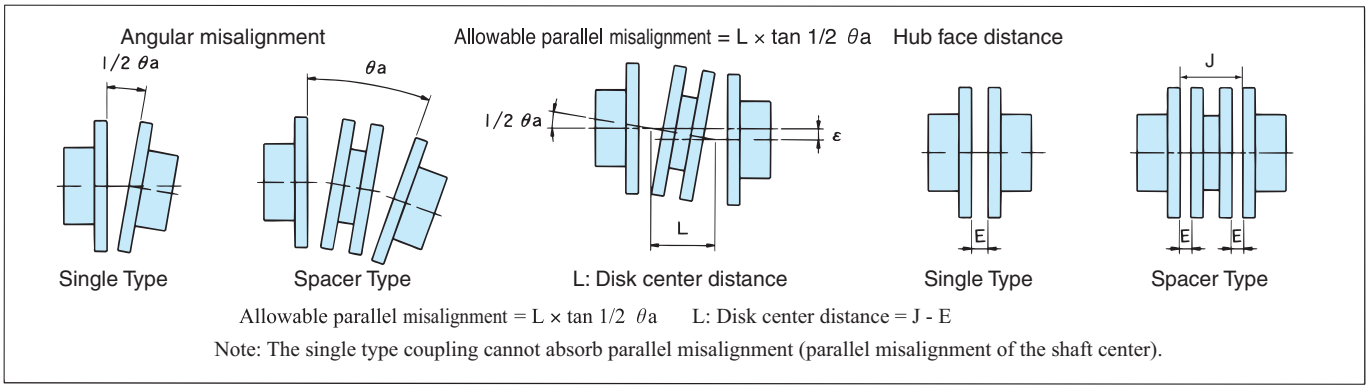

Allowable parallel misalignment = L × tan 1/2 θa L: Disk center distance = J - E

Note: The single type coupling cannot absorb parallel misalignment (parallel misalignment of the shaft center).

The allowable angular misalignment, parallel misalignment and hub face distance misalignment all act in correlation to each other. When one increases, the others decrease. These factors must, therefore, be considered together. Perform the initial centering adjustment carefully so that the following recommended value is not exceeded.

Table 1 Recommended Centering Value (Single Type Coupling)

	Model No.	Angular Misalignment 1/2 θ a (deg)	Angular Misalignment Dial Reading T.I.R.mm	Parallel Misalignment ε (mm)	Hub Face Distance Misalignment E (mm)
Single Type	NEF 02	0.25°	0.25	Errors cannot be absorbed.	4.9±0.25
	NEF 04	0.25°	0.29		6.1±0.25
	NEF 10	0.25°	0.35		6.6±0.25
	NEF 18	0.25°	0.40		8.3±0.25
	NEF 25	0.25°	0.45		11.2±0.25
	NEF 45	0.25°	0.55		11.7±0.25
	NEF 80	0.25°	0.62		11.7±0.25
	NEF 130	0.25°	0.73		16.8±0.25
	NEF 210	0.25°	0.84		17.0±0.25
	NEF 340	0.25°	0.93		21.6±0.25
	NEF 540	0.25°	1.07	*	23.9±0.25
	NEF 700	0.25°	1.20		27.2±0.25

* The Single Type Coupling cannot absorb parallel misalignment, so the parallel misalignment should be set to within 0.02 mm during centering adjustment.

② Long Spacer Type

E: Hub face distance
J: Flange face distance

Allowable parallel misalignment = L × tan 1/2 θa

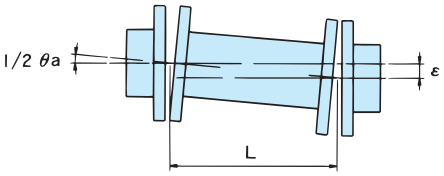

Flange-to-flange dimensions

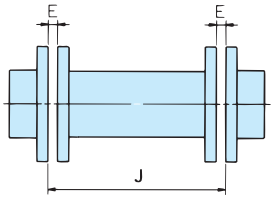

L: Disk center distance = J - E

Recommended Centering Value (Spacer Type Coupling)

	Model No.	Angular Misalignment θ a (deg)	Angular Misalignment Dial Reading T.I.R.mm	Parallel Misalignment ε (mm)	Hub Face Distance Misalignment E (mm)
Spacer Type	NEF 02 W	0.5°	0.50	0.075	4.9±0.25
	NEF 04 W	0.5°	0.58	0.13	6.1±0.25
	NEF 10 W	0.5°	0.71	0.14	6.6±0.25
	NEF 18 W	0.5°	0.81	0.17	8.3±0.25
	NEF 25 W	0.5°	0.91	0.18	11.2±0.25
	NEF 45 W	0.5°	1.10	0.22	11.7±0.25
	NEF 80 W	0.5°	1.25	0.25	11.7±0.25
	NEF 130 W	0.5°	1.46	0.27	16.8±0.25
	NEF 210 W	0.5°	1.69	0.31	17.0±0.25
	NEF 340 W	0.5°	1.86	0.33	21.6±0.25
	NEF 540 W	0.5°	2.14	0.37	23.9±0.25
	NEF 700 W	0.5°	2.41	0.46	27.2±0.25
	NEH 09 W	0.35°	1.68	0.30	19.0±0.25
	NEH 14 W	0.25°	1.20	0.30	19.0±0.25
	NEH 20 W	0.25°	1.34	0.33	19.0±0.25
	NEH 30 W	0.25°	1.50	0.36	21.5±0.25
	NEH 41 W	0.25°	1.64	0.43	24.0±0.25
	NEH 55 W	0.25°	1.94	0.50	29.5±0.25
	NEH 70 W	0.25°	2.05	0.51	31.3±0.25
	NEH 90 W	0.25°	2.23	0.55	32.0±0.25
	NEH 110 W	0.25°	2.43	0.55	32.5±0.25
	NEH 135 W	0.25°	2.56	0.60	34.0±0.25
	NEH 150 W	0.25°	2.74	0.65	34.5±0.25
	NEH 180 W	0.25°	2.85	0.70	35.5±0.25

Table 2 Recommended Centering Value (Long Spacer Types)

Model No.	Angular Misalignment θ a (deg)	Angular Misalignment Dial Reading T.I.R.mm	Parallel Misalignment ε (mm)	Hub Face Distance Misalignment E (mm)
NEF 04 W	0.5°	0.58	$L\times0.43\times10^{-2}$	6.1±0.25
NEF 10 W	0.5°	0.71	$L\times0.43\times10^{-2}$	6.6±0.25
NEF 18 W	0.5°	0.81	$L\times0.43\times10^{-2}$	8.3±0.25
NEF 25 W	0.5°	0.91	$L\times0.43\times10^{-2}$	11.2±0.25
NEF 45 W	0.5°	1.10	$L\times0.43\times10^{-2}$	11.7±0.25
NEF 80 W	0.5°	1.25	$L\times0.43\times10^{-2}$	11.7±0.25
NEF 130 W	0.5°	1.46	$L\times0.43\times10^{-2}$	16.8±0.25
NEF 210 W	0.5°	1.69	$L\times0.43\times10^{-2}$	17.0±0.25
NEF 340 W	0.5°	1.86	$L\times0.43\times10^{-2}$	21.6±0.25
NEF 540 W	0.5°	2.14	$L\times0.43\times10^{-2}$	23.9±0.25
NEF 700 W	0.5°	2.41	$L\times0.43\times10^{-2}$	27.2±0.25
NEH 09 W	0.35°	1.68	$L\times0.31\times10^{-2}$	19.0±0.25
NEH 14 W	0.25°	1.20	$L\times0.22\times10^{-2}$	19.0±0.25
NEH 20 W	0.25°	1.34	$L\times0.22\times10^{-2}$	19.0±0.25
NEH 30 W	0.25°	1.50	$L\times0.22\times10^{-2}$	21.5±0.25
NEH 41 W	0.25°	1.64	$L\times0.22\times10^{-2}$	24.0±0.25
NEH 55 W	0.25°	1.94	$L\times0.22\times10^{-2}$	29.5±0.25
NEH 70 W	0.25°	2.05	$L\times0.22\times10^{-2}$	31.3±0.25
NEH 90 W	0.25°	2.23	$L\times0.22\times10^{-2}$	32.0±0.25
NEH 110 W	0.25°	2.43	$L\times0.22\times10^{-2}$	32.5±0.25
NEH 135 W	0.25°	2.56	$L\times0.22\times10^{-2}$	34.0±0.25
NEH 150 W	0.25°	2.74	$L\times0.22\times10^{-2}$	34.5±0.25
NEH 180 W	0.25°	2.85	$L\times0.22\times10^{-2}$	35.5±0.25

INSTALLATION

Gear Coupling Compatible Type

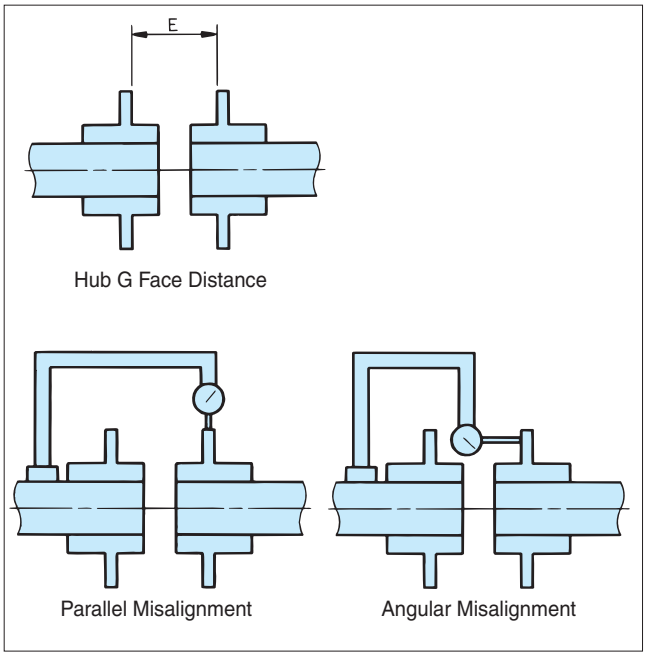

Table 3 Recommended Centering Value (Gear Coupling Compatible Type)

Model No.	Angular Misalignment		Parallel Misalignment	Hub Face Distance Misalignment
	θ° (deg)	Dial Reading T.I.R.mm	ε (mm)	E (mm)
NEF45G	0.5°	1.05	0.20	61.4±0.50
NEF80G	0.5°	1.20	0.23	68.4±0.50
NEF130G	0.5°	1.45	0.25	78.6±0.50
NEF210G	0.5°	1.65	0.30	88.0±0.50
NEF340G	0.5°	1.85	0.30	97.2±0.50
NEF540G	0.5°	2.15	0.38	112.8±0.50
NEF700G	0.5°	2.40	0.45	136.4±0.50
NEH09G	0.35°	1.68	0.25	109.0±0.50
NEH14G	0.25°	1.20	0.18	107.0±0.50
NEH20G	0.25°	1.35	0.20	121.6±0.50
NEH30G	0.25°	1.50	0.23	128.0±0.50
NEH41G	0.25°	1.63	0.25	143.0±0.50

Relationship between Parallel Misalignment and Angular Misalignment for the Spacer Type Coupling

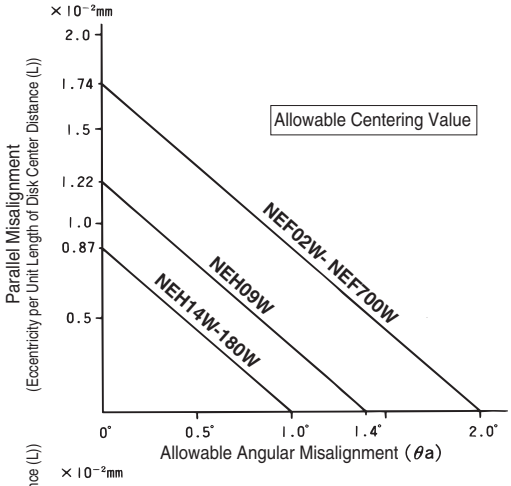

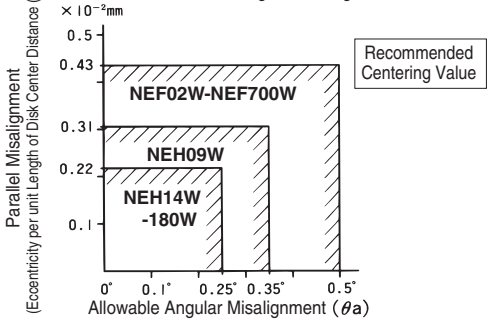

① Adjusting the hub-to-hub dimension "E"

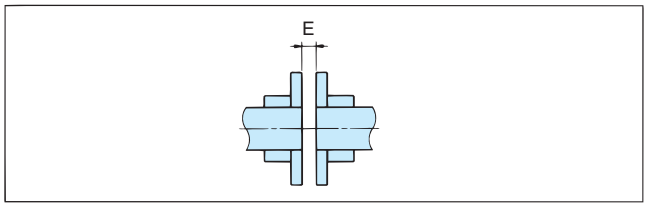

For both the Spacer Type and Single Type couplings, measure dimension "E" at four places (at 90° angles), and adjust the hub position so that the average value of dimension "E" is within ±0.25 mm.
When a stepped shaft is used for both the drive and driven shafts, the margin for adjustment may be limited. In this case, give consideration in advance so that dimension "E" can be adjusted.

② Adjusting the angular misalignment (θ°)

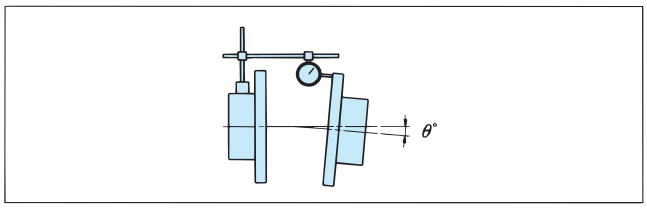

a) With a dial gauge fixed to one of the hubs as shown above, rotate the hub to find the minimum indication on the dial gauge, and set that to "0".
b) Rotate the hub with the dial gauge 360°, and read the value for the angular misalignment.
c) Move the equipment with a shim until the reading on the dial gauge is within the recommended angular misalignment range specified in Table 1.

③ Adjusting the parallel misalignment "ε" (mm)

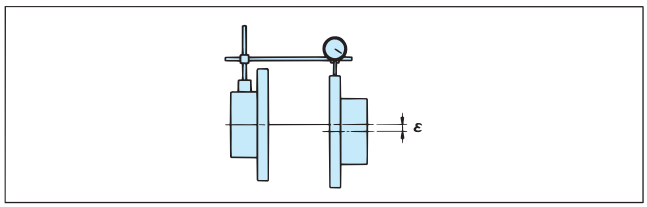

a) With a dial gauge fixed to the hub flange as shown above, rotate the hub to find the minimum indication on the dial gauge, and set that to "0".
b) Rotate the hub with the dial gauge 360°, and read the value for the parallel misalignment.
c) The reading on the dial gauge around the periphery of the hub flange may fluctuate markedly at the hub's drilled bore. This is because the flange is displaced toward the periphery while machining the drilled bore. When reading the dial gauge, disregard the values at such locations.
d) Move the equipment with a shim until the reading on the dial gauge is within twice the recommended parallel misalignment "ε" range specified in Table 1.
e) If the equipment is moved for the purpose of parallel misalignment adjustment, perform the angular misalignment adjustment procedure once again.

④ Repeat the above adjustment procedures until all of the coupling's displacement values are acceptable.

⑤ Tighten all U-nuts with the torque specified in Table 4 (p. 40). ECHT-FLEX couplings transmit torque via the friction force that is generated between the disk and washer through the U-nut tightening force. Be sure to follow the tightening torque specified in Table 4 (p. 40).

1. Reamer Bolt Tightening Torque

ECHT-FLEX couplings transmit torque via the friction force between the reamer bolt and the U-nut. Tighten the reamer bolts and U-nuts securely with the specified torque.
However, NES Series couplings are delivered as a completed assembly; never loosen the hexagon socket head bolt that fastens the disk.

Table 4 NEF Series (except G type)

Model No.	Reamer Bolt Tightening Torque N·m{kgf·m}	Reamer Bolt Size
NEF 02	4.90 { 0.5 }	M 5
NEF 04	8.82 { 0.9 }	M 6
NEF 10	8.82 { 0.9 }	M 6
NEF 18	21.6 { 2.2 }	M 8
NEF 25	21.6 { 2.2 }	M 8
NEF 45	41.2 { 4.2 }	M10
NEF 80	78.4 { 8.0 }	M12
NEF130	78.4 { 8.0 }	M12
NEF210	177 { 18.1 }	M16
NEF340	177 { 18.1 }	M16
NEF540	470 { 48.0 }	M20
NEF700	657 { 67.0 }	M24
NEH 09	470 { 48.0 }	M20
NEH 14	568 { 58.0 }	M22
NEH 20	784 { 80.0 }	M24
NEH 30	1170 {119.0 }	M27
NEH 41	1590 {162.0 }	M30
NEH 55	2254 {230 }	M36
NEH 70	2548 {260 }	M36
NEH 90	3234 {330 }	M39
NEH110	3920 {400 }	M42
NEH135	4900 {500 }	M45
NEH150	5488 {560 }	M48
NEH180	6860 {700 }	M52

Gear Coupling Compatible Type

Model No.	Reamer Bolt (A) Tightening Torque N·m{kgf·m}	Size of Reamer Bolt (A)	Reamer Bolt (B) Tightening Torque N·m{kgf·m}	Size of Reamer Bolt (B)
NEF 45G	41.2 { 4.2 }	M10	8.82 { 0.9 }	M 6
NEF 80G	78.4 { 8.0 }	M12	21.6 { 2.2 }	M 8
NEF130G	78.4 { 8.0 }	M12	21.6 { 2.2 }	M 8
NEF210G	177 { 18.1 }	M16	41.2 { 4.2 }	M10
NEF340G	177 { 18.1 }	M16	41.2 { 4.2 }	M10
NEF540G	470 { 48.0 }	M20	78.4 { 8.0 }	M12
NEF700G	657 { 67.0 }	M24	78.4 { 8.0 }	M12
NEH 09G	470 { 48.0 }	M20	78.4 { 8.0 }	M12
NEH 14G	568 { 58.0 }	M22	78.4 { 8.0 }	M12
NEH 20G	784 { 80.0 }	M24	177 { 18.1 }	M16
NEH 30G	1170 {119.0 }	M27	177 { 18.1 }	M16
NEH 41G	1590 {162.0 }	M30	470 { 48.0 }	M20

Reamer Bolt Face-to-Face Dimensions

Unit: mm

Size	M5	M6	M8	M10	M12	M16	M20	M22	M24	M27	M30
S	8	10	13	17	19	24	30	32	36	41	46

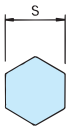

2. Tightening the Reamer Bolt

When tightening the reamer bolts, be careful not to apply an axial force to the coupling hub.
If an axial force is applied to the hub, the disk may warp and become fixed in that warped state. Tighten the reamer bolts securely with the torque specified in the table above.

● The U-nut is made of metal. It can be mounted and dismounted up to 20 times.
If you will need to mount and dismount the U-nut more than 20 times, keep a spare U-nut on hand.

3. Removing the Coupling

The Spacer Type coupling can be removed from the shaft without running the drive or driven equipment. This feature considerably simplifies centering adjustment when re-mounting the coupling.

<Removal Procedure>

1. Loosen all reamer bolts and remove the disks and spacers. (Fig. 1)
2. Loosen the set bolt that fastens the hub, and then slide the hub off to remove it. (Fig. 2)
3. To re-mount the coupling, perform the above steps in reverse order. After both hubs are mounted to the shaft, it is recommended that you check the centering level to verify the mounting state.

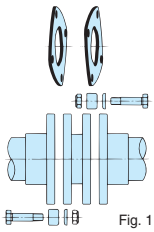
Fig. 1

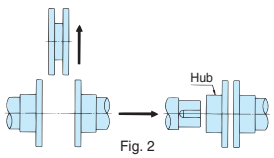

Fig. 2

4. Inspection

After operating the equipment for one or two hours, check the angular misalignment and the parallel misalignment once again. At this time, re-tighten the bolts and nuts with the torque specified in the table above.
Once the equipment has been in operation for 6 months or one year, check the U-nuts for looseness. It is recommended that you mark the reamer bolts and U-nuts at the time of installation so that you can check for looseness later on. Be sure to check for any abnormalities in other components as well.

INSTALLATION

Installing NES Series couplings

1. Installing the Coupling

Read the instruction manual carefully to understand the proper method of handling couplings. Since NES Series ECHT-FLEX couplings are delivered as a completed assembly (finished bore), the coupling can be directly mounted to your equipment. Mount the coupling to the shaft according to the following procedure.

When mounting the coupling, be careful not to apply excess force to the coupling, and be sure not to drop the coupling. Never loosen the hexagon socket head bolt that fastens the disk.

2. Mounting the Coupling to a Shaft

① Use a cloth to wipe any dust and oil completely off the surface of the target shaft and the coupling mounting surface.

② Perform the shaft centering adjustment procedure and mount the coupling to the shaft.

The allowable angular misalignment, allowable parallel misalignment and allowable axial displacement all act in correlation to each other. When one increases, the others decrease. These factors must, therefore, be considered together. Perform the centering adjustment while referring to the following instructions.

<When Using the Spacer Type>

Convert the parallel misalignment into an angular misalignment (Graph 1).

(Graph 1) Spacer Type

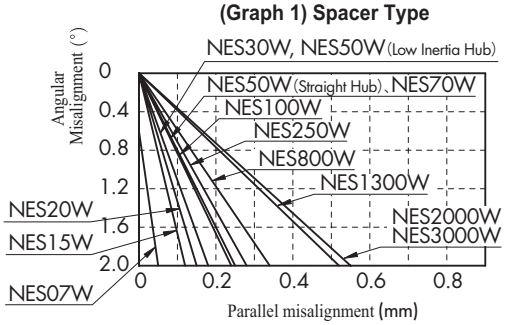

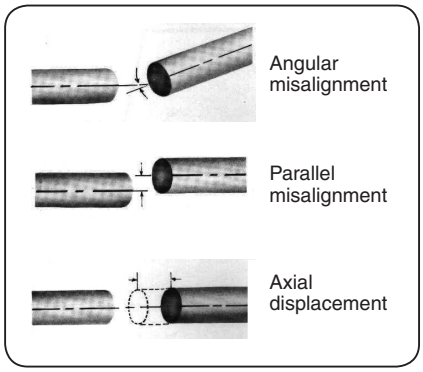

Apply the total of the converted value and angular misalignment to the angular misalignment shown in Graph 2.

Adjust the centering condition so that the misalignment does not exceed the range specified for each size.

(Graph 2) Spacer Type

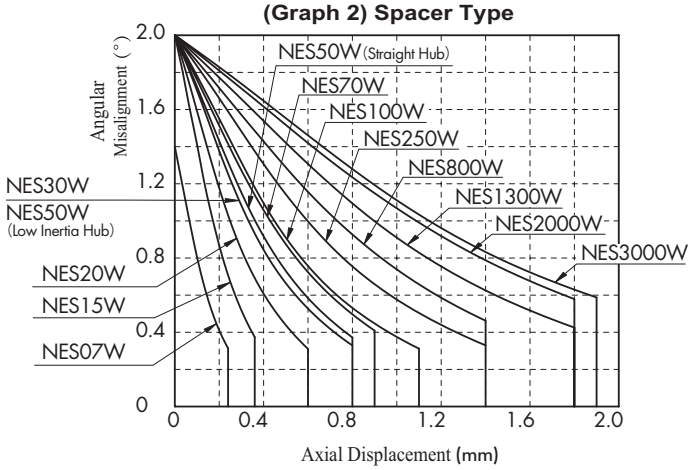

(Graph 3) Single Type

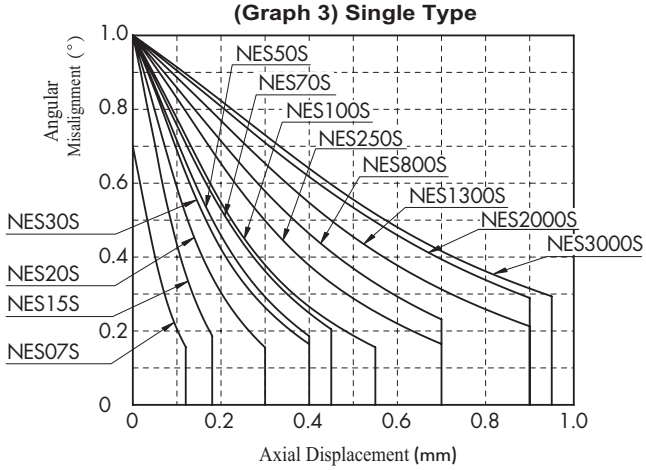

<When Using the Single Type>

The capacity of the Single Type Coupling to absorb a parallel misalignment is extremely small. Therefore, the centering adjustment should be conducted mainly to correct any angular misalignment and axial displacement.

Graph 3 shows the correlation between the coupling's allowable angular misalignment and allowable axial displacement.

Adjust the centering condition so that the misalignment does not exceed the range specified for each size.

③ Make sure that the mounted coupling can be moved in the rotating and axial directions with only a light force when the clamp bolt is loosened. If the coupling cannot be moved smoothly, re-adjust the centering condition in Step ② .

④ Tighten the clamp bolt with the torque specified in Table 5.

Then, insert the shaft all the way until it reaches the clamp hub end face.

Table 5

Model No.	Clamp Bolt Size	Tightening Torque N·m {kgf·m}
NES07	M2	0.50 { 0.05 }
NES15	M2	0.50 { 0.05 }
NES20	M2.5	1.0 { 0.10 }
NES30	M2.5	1.0 { 0.10 }
NES50	M3	1.9 { 0.19 }
NES70	M3	1.9 { 0.19 }
NES100	M4	3.8 { 0.39 }
NES250	M4	3.8 { 0.39 }
NES800	M6	12 { 1.22 }
NES1300	M6	12 { 1.22 }
NES2000	M8	30 { 3.1 }
NES3000	M8	30 { 3.1 }

BORE SPECIFICATIONS

Spacer Type

NEF Series

Spacer Type （Standard Hub×Standard Hub） NEF□□W-N□□×N□□

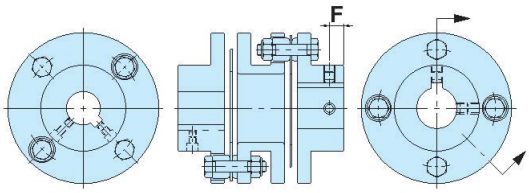

Spacer Type （Extended-Dia. Hub×Extended-Dia. Hub） NEF□□W-K□□×K□□

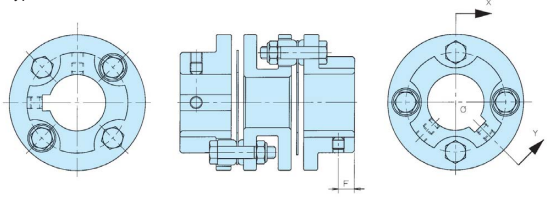

Spacer Type （Extended-Dia. Hub×Standard Hub） NEF□□W-K□□×N□□

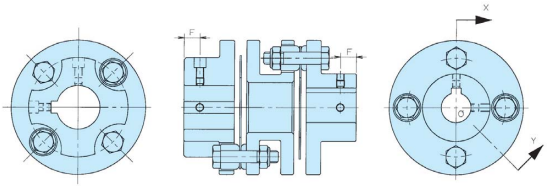

Long Spacer Type (Standard Length) NEF-W-JS

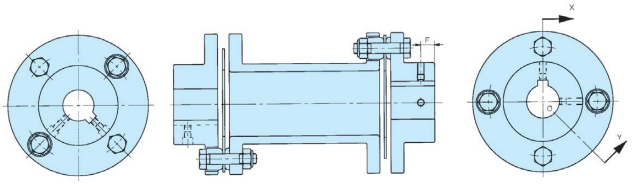

NEH Series

Spacer Type NEH□□W-N□□×N□□

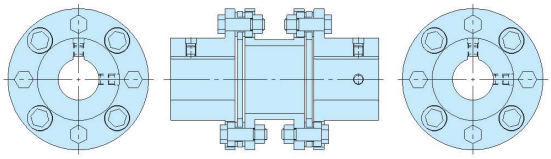

Single Type

Single Type （Standard Hub×Standard Hub） NEF□□S-N□□×N□□

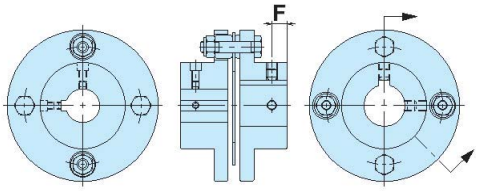

Single Type (Extended-Dia. Hub×Extended-Dia. Hub) NEF□□S-K□□×K□□

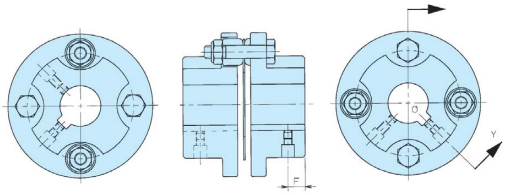

Single Type （Extended-Dia. Hub×Standard Hub） NEF□□S-K□□×N□□

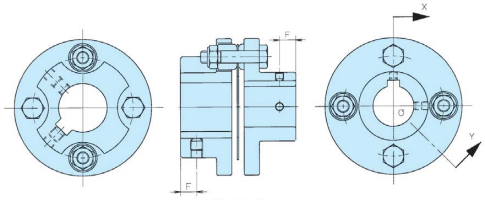

Long Spacer Type NEF-W-J

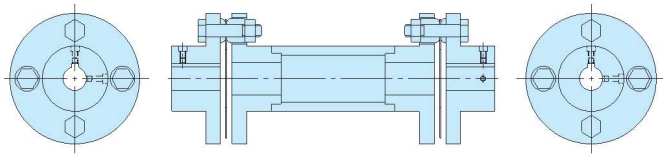

Single Plate Spacer Type NEF-W-JT

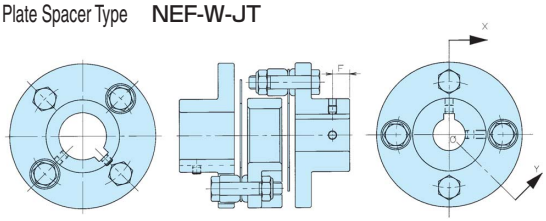

[General Matching of the Keyway Angles]

When machining shaft bores at Tsubaki, the angle of the keyway in the right and left hubs may be misaligned as shown above.

Hub keyway angles generally match: NEH Series, NEF Long Spacer Type

Hub keyway angles do not match: NEF Single Type, NEF Spacer Type, NEF Long Spacer Type (standard length), NEF Single Plate Spacer Type

When accurate matching of the keyway angles is required, please specify the “matching keyway angle type” when placing your order. With the matching keyway angle type, the maximum angle difference is ±2°.

When higher accuracy is required in matching keyway angles, the Power-Lock Type is recommended.

BORE SPECIFICATIONS

Dimension "F"

Unit: mm

Model No.	NEF02	NEF04	NEF10	NEF18	NEF25	NEF45	NEF80	NEF130	NEF210	NEF340	NEF540	NEF700
Dimension "F"	5	8	8	10	12	15	18	20	20	25	30	35

Set Screw Size

Unit: mm

Model No.	Standard Shaft Bore Diameter								
	9-20	22	24-29	30	32-38	40	42-48	50	52
NEF02	M4 × 4								
NEF04	M4 × 4	M4 × 4							
NEF10	M4 × 4	M6 × 6	M6 × 6	M4 × 4	M4 × 4				
NEF18	M4 × 4	M6 × 6	M6 × 6	M6 × 6	M4 × 4				
NEF25	M5 × 5	M5 × 5	M6 × 6	M6 × 6	M8 × 8	M6 × 6	*1		
NEF45	M5 × 5	M5 × 5	M6 × 6	M6 × 6	M8 × 8	M8 × 8	M8 × 8	M6 × 6	
NEF80	M6 × 6	M6 × 6	M6 × 6	M6 × 6	M8 × 8	M8 × 8	M10 × 10	M10 × 10	M10 × 10
NEF130			M8 × 8	M8 × 8	M8 × 8	M8 × 8	M10 × 10	M10 × 10	M12 × 12
NEF210			M10 × 10	M10 × 10	M10 × 10	M10 × 10	M10 × 10	M10 × 10	M12 × 12
NEF340							M12 × 12	M12 × 12	M12 × 12
NEF540									M12 × 12
NEF700									M12 × 12

*1 ϕ 42 : M5 × 5, ϕ 43–48 : M8 × 8

Unit: mm

Model No.	Standard Shaft Bore Diameter								
	55-57	60	63-70	71-75	80	85-90	95-100	105-110	112-115
NEF80	M8 × 8	M6 × 6							
NEF130	M12 × 12	M12 × 12	M12 × 12	M10 × 10					
NEF210	M12 × 12	M12 × 12	M16 × 16	M16 × 16	M12 × 12				
NEF340	M12 × 12	M12 × 12	M16 × 16	M16 × 16	M16 × 16	M16 × 16	M12 × 12		
NEF540	M12 × 12	M12 × 12	M16 × 16	M16 × 16	M16 × 16	M20 × 20	M20 × 20	M16 × 16	
NEF700	M12 × 12	M12 × 12	M16 × 16	M16 × 16	M16 × 16	M20 × 20	M20 × 20	M20 × 20	M16 × 16

* For set screws, tap holes are provided in two places: on the keyway and at a position 90° clockwise from the keyway tap hole.
* During shipment, two set screws are provided for each shaft bore.

Shaft Bore Machining / Keyway Dimensions

1. Tolerance for Shaft and Bore

For normal use, transition fit is recommended. For high-speed rotation that requires caution in regards to the dynamic balance, an interference fit is recommended.

For the extended-diameter hub, the keyway should be machined at the following position.

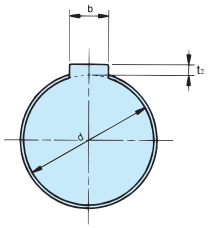

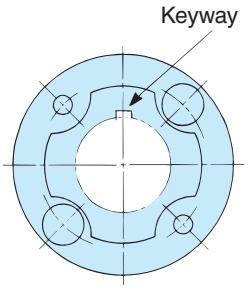

Keyway Dimension Table

New JIS (JIS B1301-1996)

Shaft Dia. d	Nominal Key Size Shaft × Height b × (h)	Keyway Depth Shaft t_1	Keyway Depth Hub t_2
Above 8, up to 10	3× 3	1.8	1.4
Above 10, up to 12	4× 4	2.5	1.8
Above 12, up to 17	5× 5	3.0	2.3
Above 17, up to 22	6× 6	3.5	2.8
Above 20, up to 25	(7× 7)	4.0	3.0
Above 22, up to 30	8× 7	4.0	3.3
Above 30, up to 38	10× 8	5.0	3.3
Above 38, up to 44	12× 8	5.0	3.3
Above 44, up to 50	14× 9	5.5	3.8
Above 50, up to 55	(15×10)	5.0	5.0
Above 50, up to 58	16×10	6.0	4.3
Above 58, up to 65	18×11	7.0	4.4
Above 65, up to 75	20×12	7.5	4.9
Above 75, up to 85	22×14	9.0	5.4
Above 80, up to 90	(24×16)	8.0	8.0
Above 85, up to 95	25×14	9.0	5.4
Above 95, up to 110	28×16	10.0	6.4
Above 110, up to 130	32×18	11.0	7.4
Above 125, up to 140	(35×22)	11.0	11.0
Above 130, up to 150	36×20	12.0	8.4
Above 140, up to 160	(38×24)	12.0	12.0
Above 150, up to 170	40×22	13.0	9.4
Above 160, up to 180	(42×26)	13.0	13.0
Above 170, up to 200	45×25	15.0	10.4
Above 200, up to 230	50×28	17.0	11.4

Old JIS (JIS B1301-1959)

Shaft Dia. d	Nominal Key Size Shaft × Height b × (t_2 + t_1)	Keyway Depth Shaft t_1	Keyway Depth Hub t_2
10 or more, up to 13	4× 4	2.5	1.5
Above 13, up to 20	5× 5	3.0	2.0
Above 20, up to 30	7× 7	4.0	3.0
Above 30, up to 40	10× 8	4.5	3.5
Above 40, up to 50	12× 8	4.5	3.5
Above 50, up to 60	15×10	5	5
Above 60, up to 70	18×12	6	6
Above 70, up to 80	20×13	7	6
Above 80, up to 95	24×16	8	8
Above 95, up to 110	28×18	9	9
Above 110, up to 125	32×20	10	10
Above 125, up to 140	35×22	11	11
Above 140, up to 160	38×24	12	12
Above 160, up to 180	42×26	13	13
Above 180, up to 200	45×28	14	14
Above 200, up to 224	50×31.5	16	15.5

2. Centering Adjustment

Before machining shaft bores, perform the centering adjustment as shown below:

Hub

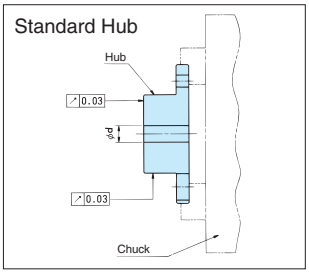

With the square hub for the NEF10, 18, 25, perform the centering adjustment on the flange periphery. The reading on the dial gauge may fluctuate markedly on the drilled bore in the hub. This is because the flange is displaced toward the periphery during machining of the drilled bore. When reading the dial gauge, disregard the values at such locations.

Shaft Diameter and Recommended Shaft Bore Tolerance

Shaft Dia. Size	Shaft Dia. Tolerance	Bore Dia. Transition Fit	Bore Dia. Interference Fit
12	j6	H7	M7
14			
16			
18			
19			
20			
22			
24			
25			
28			
30			
32	k6		
35			
38			
40			
42			N7
45			
48			
50			
55	m6		
56			
60			
63			

Shaft Dia. Size	Shaft Dia. Tolerance	Bore Dia. Transition Fit	Bore Dia. Interference Fit
65	m6	H7	N7
70			
71			
75			
80			P7
85			
90			
95			
100			
110			
120			
125			
130			
140			
150			
160			
170			
180			
190			
200			
210			
220			

memo

Safety Instructions

WARNING	Death or serious injury may result from misusing the product without following the directions given under this sign.
CAUTION	Minor or moderate injury, as well as damage to the product may result from misusing the product without following the directions given under this sign.

Note : Failure take heed of information labeled “CAUTION” may also lead to serious accidents depending on the situation.

WARNING

(General)
- Install a safety cover and prevent access to any rotating parts: otherwise injury may occur. Set a safety mechanism to stop the rotating parts when the cover is lifted.
- Transporting, installing, operating, maintaining or inspecting must be carried out by skilled and professional engineers to avoid mis-handling and hazardous situations.
- When coupling is used with vehicles that carry human, use a device to protect the vehicle: otherwise, accidents and damage may occur.
- When the coupling is used for an elevator, install a safety device on the elevator in order to prevent it from falling, which can cause damage and accidents resulting in death or injury.

(Unpacking upon delivery)
- If delivered in a wooden case, unpack with care. Sharp nails may cause injury.

(Additional machining)
- Never modify the coupling; the quality or function of the product may decrease and break or damage the machine or injure the operator.

(Transportation)
- Never step under the product when it is being elevated for transportation: otherwise, either the poduct or load may fall, causing accidents resulting in death or injury.

(Installation)
- Wear appropriate clothing and safety gear (safety goggles, gloves, shoes, etc.).
- Make sure the power is switched off, and the machine is completely stopped before installing. Take caution so that the power does not reconnect accidentally.
- Make sure to tighten and apply sufficient amount of anti-loosening agent to the hexagonal socket head cap screws.

(Operation)
- Avoid contact with any rotating parts (coupling, shaft, etc.) during operations. Rotating parts can catch approaching objects and cause serious injuries.

(Maintenance and inspection)
- Avoid contact with any rotating parts (coupling, shaft, etc.) during maintenance and inspection. Rotating parts can catch approaching objects and cause serious injuries.
- Make sure the power is switched off, and the machine is completely stopped before carrying out maintenance and inspection. Take caution so that the power does not reconnect accidentally.
  Make sure the driving and driven equipment are also completely stopped.

CAUTION

(General)
- Do not use coupling beyond its capacity as specified in the drawing. Exceeding its capacity can break the machine and cause injuries.
- Do not use damaged couplings. They can break your equipment and cause injuries.

(Transportation)
- Pay extra attention so that the equipment will not fall or rollover during transportations.

(Installation)
- Do not touch the edge and inner diameter of any part with bare hands to avoid possible injury.
- Make sure to align the drive and driven shafts as instructed in the manual when installing the coupling.

(Operation)
- Do not touch the coupling during operations to avoid injuries.
- Immediately stop the machine upon any sign of abnormal operation.

(Maintenance and inspection)
- Wear appropriate clothing and safety gear (safety goggles, gloves, shoes, etc.).
- Clean the surrounding area and maintain a clutter-free space to avoid secondary accidents.
- Comply with Ordinance on Labor Safety and Hygiene 2-1-1 general standards.
- Conduct periodic inspections to make sure that the drive and driven shafts are aligned as described in the manual, and that the rubber and plastic parts are not worn or deformed.

(Environment)
- Coupling scraps should be disposed as general waste by skilled professionals.
- This coupling meets RoHS (Restriction of Certain Hazardous Substances) standards and contains no hazardous chemicals.

Warranty

Tsubaki E&M Co.: hereinafter referred to as “Seller”
Customer: hereinafter referred to as “Buyer”
Goods sold or supplied by Seller to Buyer: hereinafter referred to as “Goods”

1. Warranty period without charge
   18 months effective the date of shipment or 12 months effective the first use of Goods, including installation of Goods to Buyer’s equipment or machines - whichever comes first.
2. Warranty coverage
   Should any damage or problem with the Goods arise within the warranty period, given that the Goods were operated and maintained under instructions provided in the manual, Seller would repair and replace at no charge once the Goods are returned to Seller. The following are excluded from the warranty.
   1) Any costs related to removing Goods from the Buyer’s equipment or machines to repair or replace parts.
   2) Costs to transport Buyer’s equipment or machines to the Buyer’s repair shop.
   3) Costs to reimburse any profit loss due to any repair or damage and consequential losses caused by the Buyer.
3. Warranty with charge
   Seller will charge any investigation and repair of Goods caused by:
   1) Improper installation by failing to follow the instruction manual.
   2) Insufficient maintenance or improper operation by the Buyer.
   3) Incorrect installation of Goods to other equipment or machines.
   4) Any modifications or alterations of Goods by the Buyer.
   5) Any repair by engineers other than the Seller or those designated by the Seller.
   6) Operation in an inappropriate environment not specified in the manual.
   7) Force Majeure or forces beyond the Seller’s control such as natural disasters and injustice done by a third party.
   8) Secondary damage or problem incurred by the Buyer’s equipment or machines.
   9) Defected parts supplied, or specified by the Buyer.
   10) Incorrect wiring or parameter setting by the Buyer.
   11) The end of life cycle of the Goods under normal usage.
   12) Loss or damage not liable to the Seller.
4. Dispatch Service
   Service to dispatch a Seller’s engineer to investigate, adjust or trial test Seller’s Goods is at the Buyer’s expense.
5. Disclaimer
   1) In our constant efforts to improve, Tsubaki may change the contents of this document without notice.
   2) Considerable effort has been made to ensure that the contents of this document are free from errors. However, Tsubaki makes no warranties with respect to the accuracy of information described herein. In the mean time, we would appreciate comments or reports on any inaccuracies or omissions found in this document to help us make timely amendments as necessary. Your cooperation is greatly appreciated.

TSUBAKI

TSUBAKIMOTO CHAIN CO.

Headquarters
Nakanoshima Mitsui Building
3-3-3 Nakanoshima, Kita-ku
Osaka, 530-0005, Japan
Phone : +81-6-6441-0011
URL : http://tsubakimoto.com

Chain & Power Transmission Sales
1-3 Kannabidai 1-chome
Kyotanabe,
Kyoto, 610-0380, Japan
Phone : +81-774-64-5022

Group companies

NORTH and SOUTH AMERICA

U.S. TSUBAKI POWER TRANSMISSION, LLC
301 E. Marquardt Drive, Wheeling, IL 60090, U.S.A.
Phone : +1-847-459-9500
URL : http://www.ustsubaki.com

TSUBAKI of CANADA LIMITED
1630 Drew Road, Mississauga, Ontario, L5S 1J6, Canada
Phone : +1-905-676-0400
URL : http://tsubaki.ca

TSUBAKI BRASIL EQUIPAMENTOS INDUSTRIAIS LTDA.
R. Pamplona, 1018, CJ. 73/74, Jd. Paulista
CEP 01405-001, São Paulo, S.P.Brazil
Phone : +55-11-3253-5656
URL : http://tsubaki.ind.br

EUROPE

TSUBAKIMOTO EUROPE B.V.
Aventurijn 1200, 3316 LB Dordrecht, The Netherlands
Phone : +31-78-620-4000
URL : http://tsubaki.eu

TSUBAKIMOTO U.K. LTD
Osier Drive, Sherwood Park, Annesley, Nottingham
NG15 0DX, United Kingdom
Phone : +44-1623-688-700
URL : http://tsubaki.eu

TSUBAKI DEUTSCHLAND GmbH
ASTO Park Oberpfaffenhofen, Friedrichshafener Straße 1
D-82205, Gilching, Germany
Phone : +49-8105-7307100
URL : http://tsubaki.eu

OOO "TSUBAKI KABELSCHLEPP"
Prospekt Andropova 18, Building 6
115432 Moscow, Russia
Phone : +7-499-418212
URL : http://tsubaki.eu

ASIA and OCEANIA

TAIWAN TSUBAKIMOTO CO.
No. 33, Lane 17, Zihciang North Road
Gueishan Township Taoyuan County Taiwan R.O.C.
Phone : +886-3-3293827/8/9
URL : http://tsubakimoto.com.tw

TSUBAKIMOTO SINGAPORE PTE. LTD.
25 Gul Lane, Jurong, Singapore 629419
Phone :+65-6861-0422/3/4
URL : http://tsubaki.sg

Vietnam Representative Office
Phone : +84-8-3999-0131/2

TSUBAKI AUSTRALIA PTY. LTD.
Unit E, 95-101 Silverwater Road
Silverwater NSW 2128, Australia
Phone : +61-02-9704-2500
URL : http://tsubaki.com.au

New Zealand Branch
Phone : +64-275-082-726

TSUBAKIMOTO CHAIN (SHANGHAI) CO. LTD.
Room 601, Urban City Centre, 45 Nanchang Road
Huangpu District, Shanghai 2000020,
People's Republic of China
Phone :+86-21-5396-6651/2
URL : http://chunben.com

TSUBAKIMOTO (THAILAND) CO. LTD.
388 Exchange Tower, 19th Floor Unit 1902
Sukhumvit Road, Klongtoey, Bangkok 10110, Thailand
Phone : +66-2-262-0667/8/9
URL : http://tsubaki.co.th

TSUBAKI INDIA POWER TRANSMISSION PTE. LTD.
Chandrika Chambers No.4, 3rd Floor, Anthony Street
Royapettah, Chennai, Tamil Nadu 600014, India
Phone :+91-44-4231-5251
URL : http://tsubaki.sg

PT. TSUBAKI INDONESIA TRADING
Wisma 46 - Kota BNI, 24th Floor, Suite 24.15
Jl. Jend. Sudirman, Kav. 1, Jakarta 10220, Indonesia
Phone :+62-21-571-4230/31
URL : http://tsubaki.sg

TSUBAKI POWER TRANSMISSION (MALAYSIA) SDN. BHD.
No. 22, Jalan Astaka U8/84A, Bukit Jelutong Industrial Park
Section U8, 40150 Shah Alam, Selangor, Malaysia
Phone : +60-3-7859-8585
URL : http://tsubaki.sg

Distributed by:

Note: In accordance with the policy of TSUBAKIMOTO CHAIN CO. to constantly improve its products, the specifications in this catalog are subject to change without notice.
Catalog No.985K502-2 ©2013/12 TSUBAKIMOTO CHAIN CO. Printed in Japan